Modular F.R.L. Units

RoHS

Modular Design with Uniform Body Style

Better visibility & environmental resistance

2-layer construction

The bowl is covered with a transparent bowl guard!

＊ Body sizes 30 and larger

- The inside is visible from 360°.
- The inner bowl is protected from the environment, allowing for improved safety.

Inner bowl
Material: Polycarbonate

Transparent bowl guard
Material: Polycarbonate

New A right angle square type pressure gauge and various attachments have been added.

Right Angle Square Type Pressure Gauge p. 8

Allows for pressure confirmation from the knob side

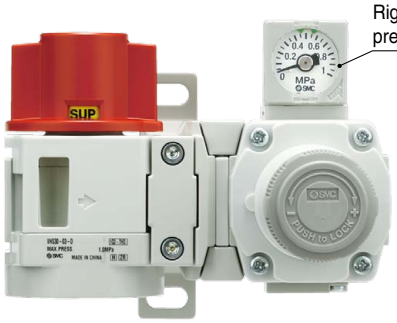

Cross Adapter p. 9

Allows for devices to be connected on the top, bottom, left, and right

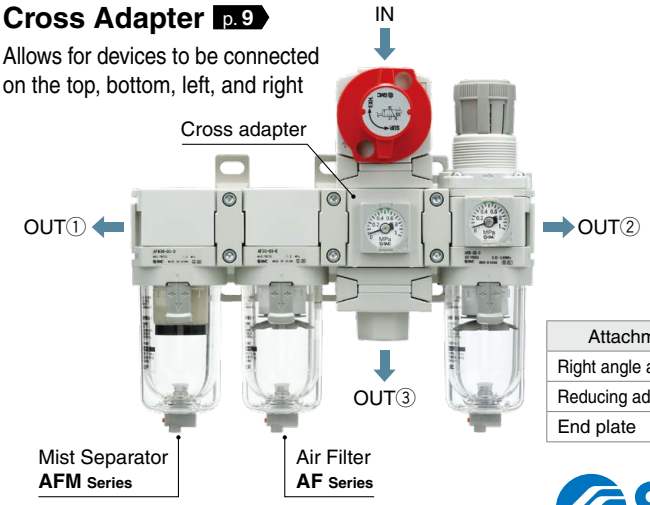

Attachment	Page
Right angle adapter	7
Reducing adapter	10
End plate	70

AC Series

SMC

CAT.ES40-69D

Transparent bowl guard

Better environmental resistance: The transparent bowl guard protects the inner bowl!

The bowl guard with windows has been replaced with a polycarbonate transparent bowl guard. Now, even if the environment changes and the bowl is exposed to corrosive chemical or oil splash, the foreign matter will not come into direct contact with the pressurized bowl. This can reduce the risk of bowl breakage.

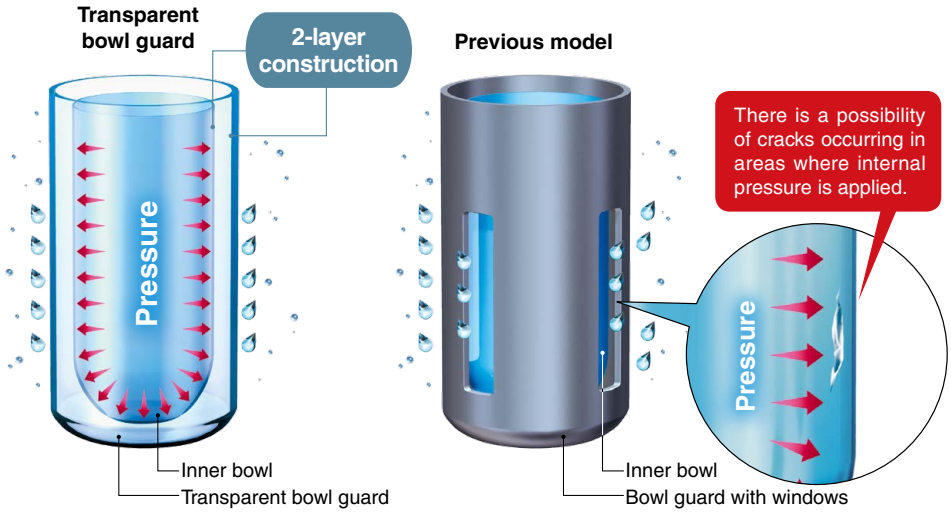

Better visibility: 360°

The transparent bowl guard allows for easy checking of the condensate level inside the filter bowl and the remaining oil amount in the lubricator from any direction.

Applicable model

＊ Body sizes 30 and larger

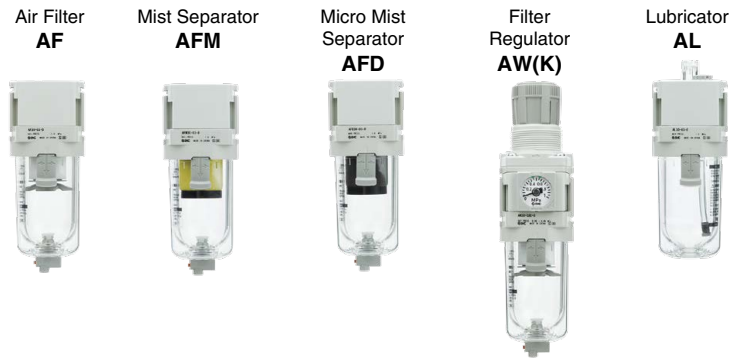

No tools are required.

Easier replacement of the element

＊ AF20-D to AF40-D only

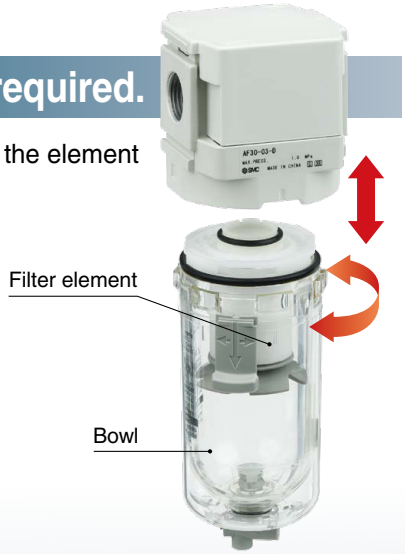

Color-identifiable elements

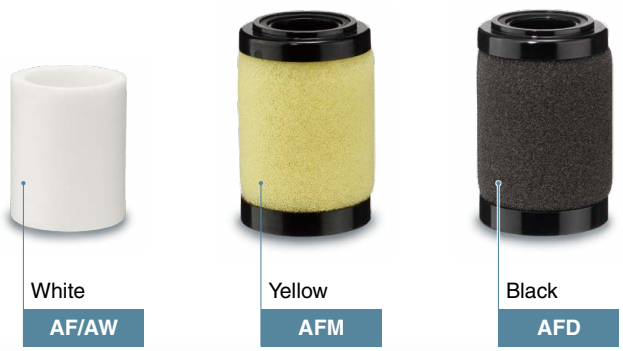

Selection of pressure gauges

(Right angle)
Square embedded
type pressure gauge

Round type
pressure gauge

Digital pressure switch

Open/close type gauge cover

❶ Open the gauge cover.

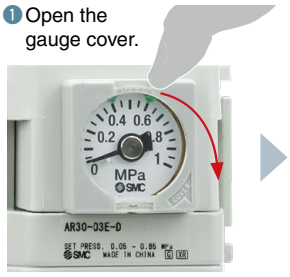

Open the gauge cover in the direction of the arrow with your fingertips.

❷ Adjust the indicator to a specified position.

Adjust the indicator using a flat blade screwdriver.

❸ Close the gauge cover.

Close the gauge cover in the direction of the arrow and push it in until it clicks in place.

Easy to handle

Easy to hold when unlocked

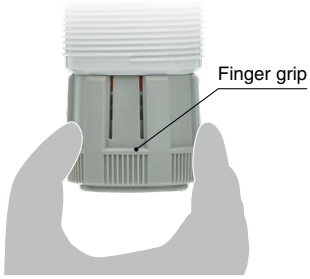

Locked

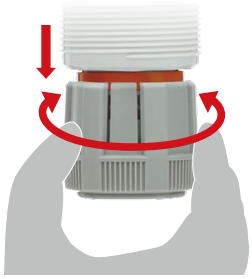

Pressure regulation
while unlocked

Mounting (Single unit)

· The mounting pitch for panel mounting is interchangeable between the AR20(K)-D to AR40(K)-06-D and the AR(K)-B series and between the AW20(K)-D to AW40(K)-06-D and the AW(K)-B series. The brackets and set nuts are the same for both existing and new products.

Series	Body size					Details
	20	30	40	50	60	
AF						p. 75
AFM AFD						p. 86
AR(K)						p. 95
AW(K)						p. 116
AL						p. 107

Series Configuration

AC20 to AC60 Series

p. 17

Air Filter + Regulator + Lubricator

AF AR AL

	Port size					
	1/8	1/4	3/8	1/2	3/4	1
Size 20	●	●				
Size 30		●	●			
Size 40		●	●	●		
Size 40-06					●	
Size 50					●	●
Size 60						●

AC20A to AC60A Series

p. 25

Filter Regulator + Lubricator

AW AL

	Port size					
	1/8	1/4	3/8	1/2	3/4	1
Size 20	●	●				
Size 30		●	●			
Size 40		●	●	●		
Size 40-06					●	
Size 50					●	●
Size 60						●

AC20B to AC60B Series

p. 31

Air Filter + Regulator

AF AR

	Port size					
	1/8	1/4	3/8	1/2	3/4	1
Size 20	●	●				
Size 30		●	●			
Size 40		●	●	●		
Size 40-06					●	
Size 50					●	●
Size 60						●

AC20C to AC40C Series

p. 39

Air Filter + Mist Separator + Regulator

AF AFM AR

	Port size				
	1/8	1/4	3/8	1/2	3/4
Size 20	●	●			
Size 30		●	●		
Size 40		●	●	●	
Size 40-06					●

AC20D to AC40D Series

p. 47

Filter Regulator + Mist Separator

AW AFM

	Port size				
	1/8	1/4	3/8	1/2	3/4
Size 20	●	●			
Size 30		●	●		
Size 40		●	●	●	
Size 40-06					●

Table of Modular F.R.L. Unit Combinations for AC Assembly

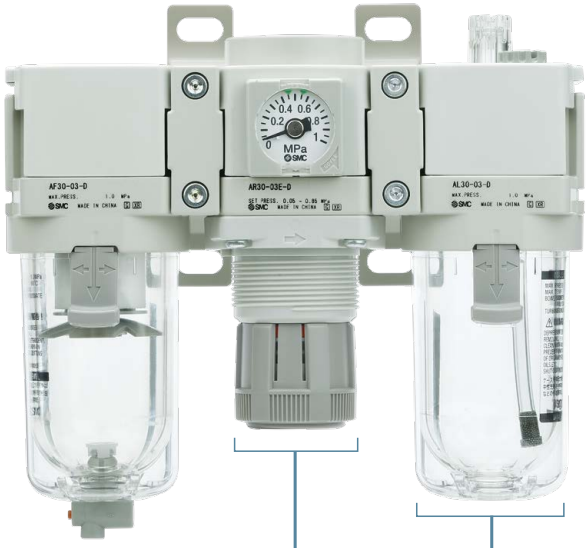

Air Filter
AF Series

p. 73

	Port size					
	1/8	1/4	3/8	1/2	3/4	1
Size 20	●	●				
Size 30		●	●			
Size 40		●	●	●		
Size 40-06					●	
Size 50					●	●
Size 60						●

Mist Separator
Micro Mist Separator
AFM/AFD Series

p. 84

	Port size				
	1/8	1/4	3/8	1/2	3/4
Size 20	●	●			
Size 30		●	●		
Size 40		●	●	●	
Size 40-06					●

Regulator
AR Series

p. 92

Regulator with Backflow Function
AR□K Series

p. 92

Filter Regulator
AW Series

p. 112

Filter Regulator with Backflow Function
AW□K Series

p. 112

	Regulator						Regulator with Backflow Function					
	Port size						Port size					
	1/8	1/4	3/8	1/2	3/4	1	1/8	1/4	3/8	1/2	3/4	1
Size 20	●	●					●	●				
Size 30		●	●					●	●			
Size 40		●	●	●				●	●	●		
Size 40-06					●						●	
Size 50					●	●					●	●
Size 60						●						●

	Filter Regulator						Filter Regulator with Backflow Function					
	Port size						Port size					
	1/8	1/4	3/8	1/2	3/4	1	1/8	1/4	3/8	1/2	3/4	1
Size 20	●	●					●	●				
Size 30		●	●					●	●			
Size 40		●	●	●				●	●	●		
Size 40-06					●						●	
Size 50												
Size 60					●	●					●	●

New Spacer
p. 57

Interchangeable with the existing model

- The new spacer can be connected to the existing AF-A, AR-B, AL-A, and AW-B series.

Lubricator
AL Series

p. 105

	Port size					
	1/8	1/4	3/8	1/2	3/4	1
Size 20	●	●				
Size 30		●	●			
Size 40		●	●	●		
Size 40-06					●	
Size 50					●	●
Size 60						●

Refer to the list of spacers for modular connection and spacers with brackets to determine AC-A/B compatibility.
Click here for details.

Attachment List

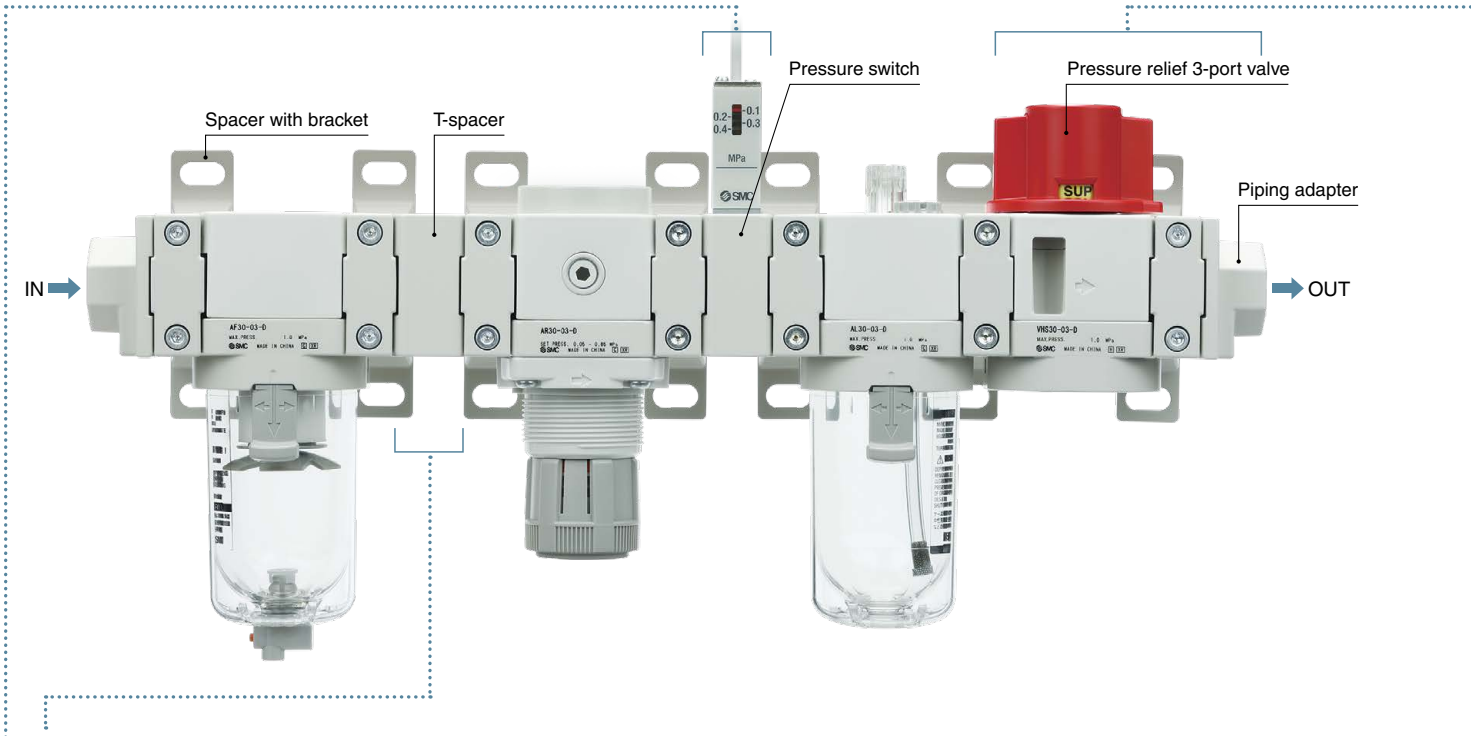

Spacers

T-Spacer Y□10 Series	Cross Spacer Y□4 Series	Spacer Y□□ Series	Spacer with Bracket Y□□T Series
Piping in 2 directions is possible (upward or downward). p. 62 Slim type*1	Piping in all 4 directions is possible. p. 63 Front and back port selectable type*1	p. 57 	p. 57

*1 The mounting pitch is interchangeable with the existing attachment.

Pressure Switches

A compact, integrated pressure switch can be easily installed to facilitate the pressure detection of the line.

Pressure Switch with T-Spacer IS10T Series	Pressure Switch with L-Shaped Piping Adapter IS10L Series	Pressure Switch IS10M Series	Pressure Switch with Piping Adapter IS10E Series
The OUT side piping can be branched downward. p. 65 	OUT side piping: Downward p. 66 	p. 64 Slim type*1	A piping adapter allows for the installation/removal of the component without removing the piping. p. 67

*1 The mounting pitch is interchangeable with the existing attachment.

Piping Adapters

Piping Adapter
E□00 Series

A piping adapter allows for the installation/removal of the component without removing the piping.

p. 59

L-Shaped Piping Adapter
E□00L Series

Upward or downward piping is possible on the inlet side and the outlet side of F.R.L. units.

p. 60

T-Shaped Piping Adapter
E□00T Series

Both upward and downward piping are possible on the inlet and outlet sides of F.R.L. units.

p. 61

New Right Angle Adapter
E□10T Series

Allows for modular connection with the product rotated 90 degrees

p. 68

New Reducing Adapter
E□10R Series

Allows for modular connection with products 1 body size larger or smaller

p. 68

New Cross Adapter
Y□4M Series

Allows for devices to be connected on the top, bottom, left, and right

p. 69

Pressure Relief 3-Port Valve

Pressure Relief 3-Port Valve
VHS Series

By using a pressure relief 3-port valve, pressure left in the line can be easily exhausted.

p. 58

New End Plate
E□00E Series

For blocking the unused piping ports on sides without a modular connection

p. 70

Space-saving design and reduced piping labor

Space-saving

Max. 16.4%*1 reduction

Approx. 46 mm ← Approx. 55 mm

*1 For size 30

Reduced piping labor

Number of screw-in connections

1 location ← 2 locations

New When using an L-shaped piping adapter

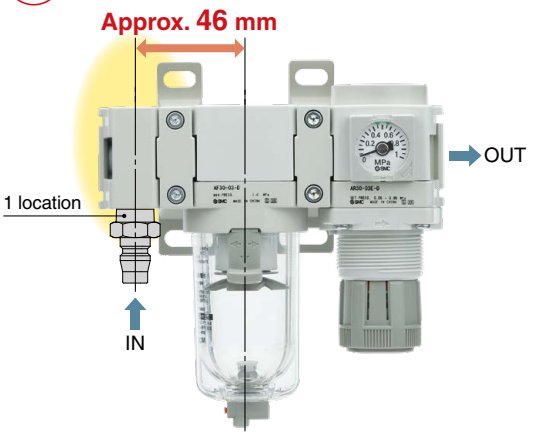

When using a street elbow*1 *1 Commercially available

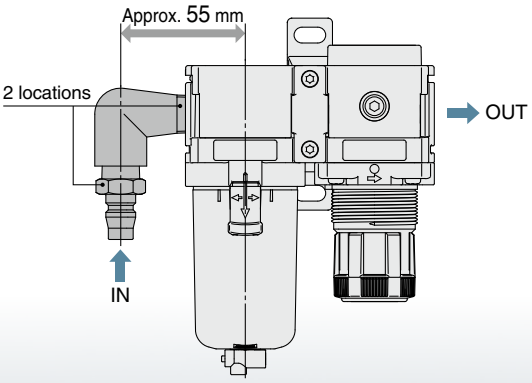

Improved piping design flexibility

T-shaped Piping Adapter

Air can be released either upward or downward. p. 61

∗ Size: 20 to 60

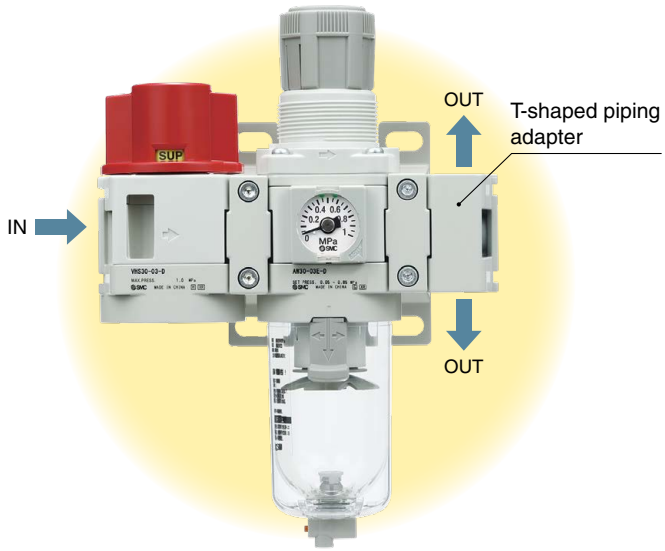

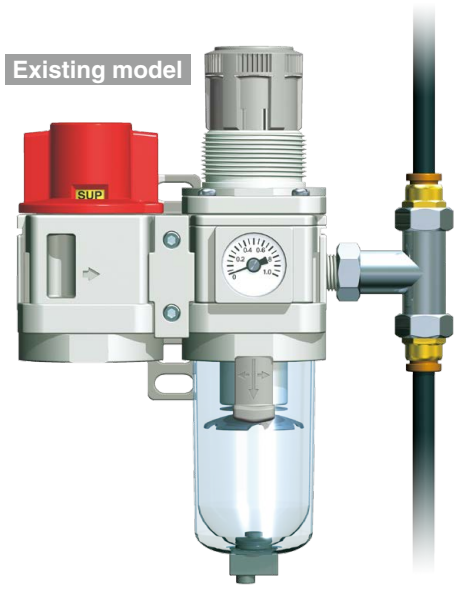

Right Angle Adapter

Modular connection with the product rotated 90 degrees is possible. p. 68

∗ Size: 20 to 40

Application example

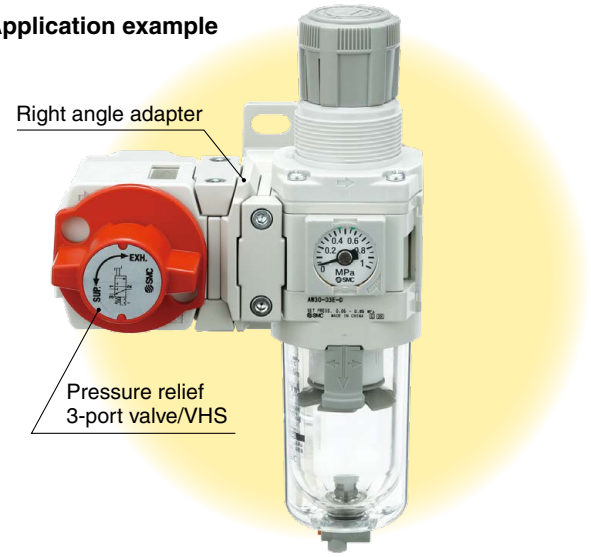

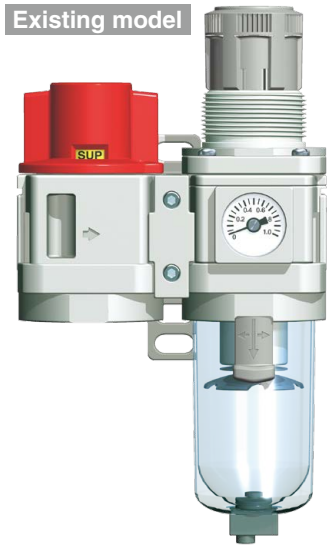

Application example (Tabletop example)

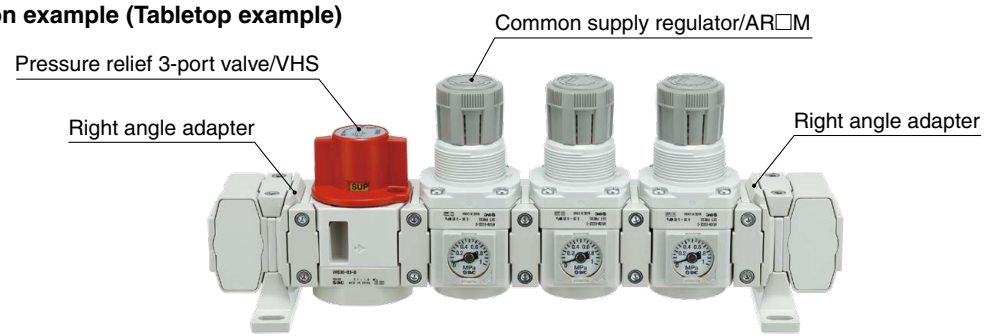

The AR□M series catalog can be viewed here.

The direction the pressure gauge faces can be changed freely.

Right Angle Square Type Pressure Gauge

The direction the pressure gauge faces can be changed in 90° increments depending on where the pressure gauge needs to be viewed from.

Pressure gauge direction	
Standard direction (At the time of shipment)	Direction 1
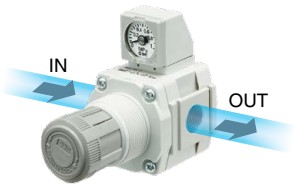	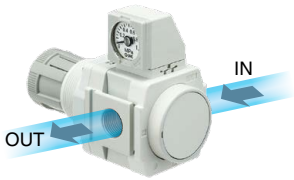
Direction 2	Direction 3
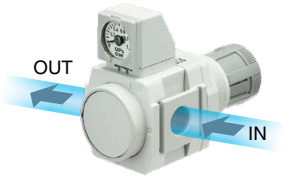	

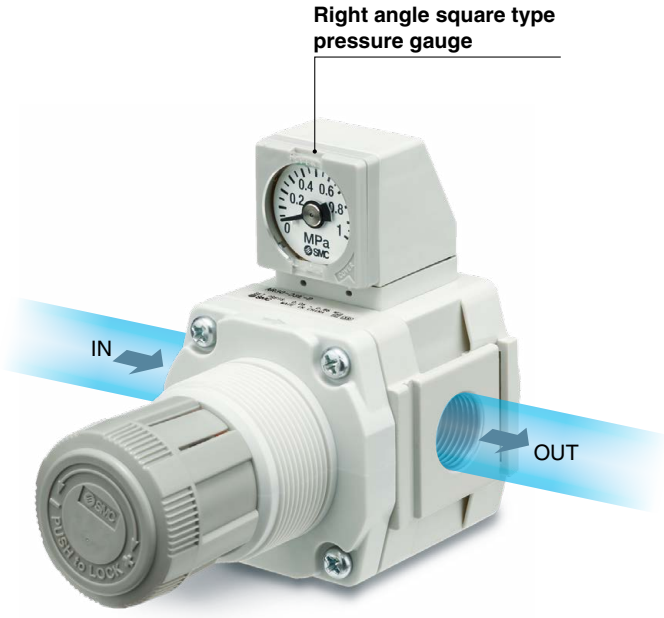

The direction the pressure gauge scale plate faces can also be changed in 90° increments depending on the piping direction.

Scale plate direction	
Standard direction (At the time of shipment)	Direction 1
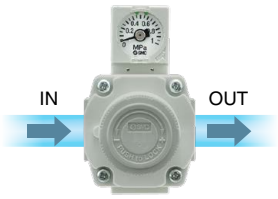	
Direction 2	Direction 3
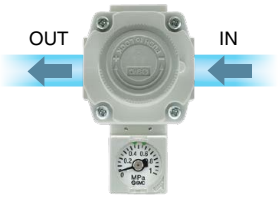	

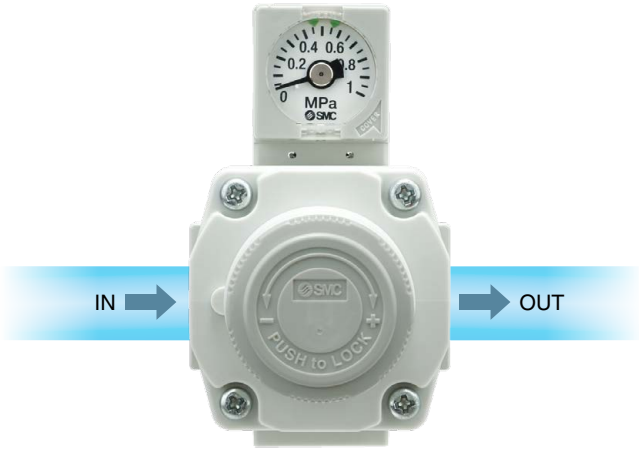

Improved piping design flexibility

Cross Adapter

Allows for devices to be connected on the top, bottom, left, and right with the use of a spacer between the product and each device p. 69

Top/bottom spacer mounting direction **Front to back mounting**

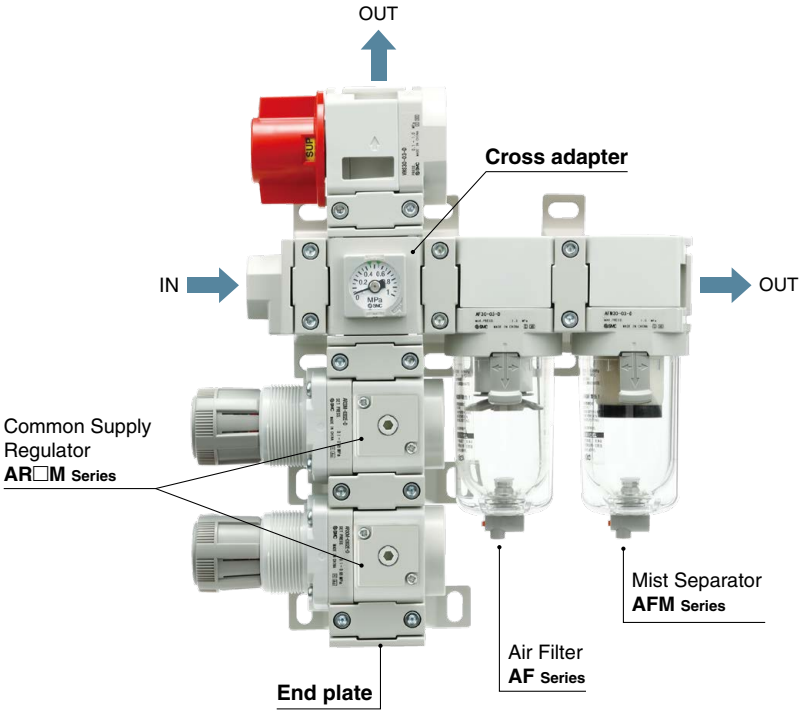

Top/bottom spacer mounting direction **Left to right mounting**

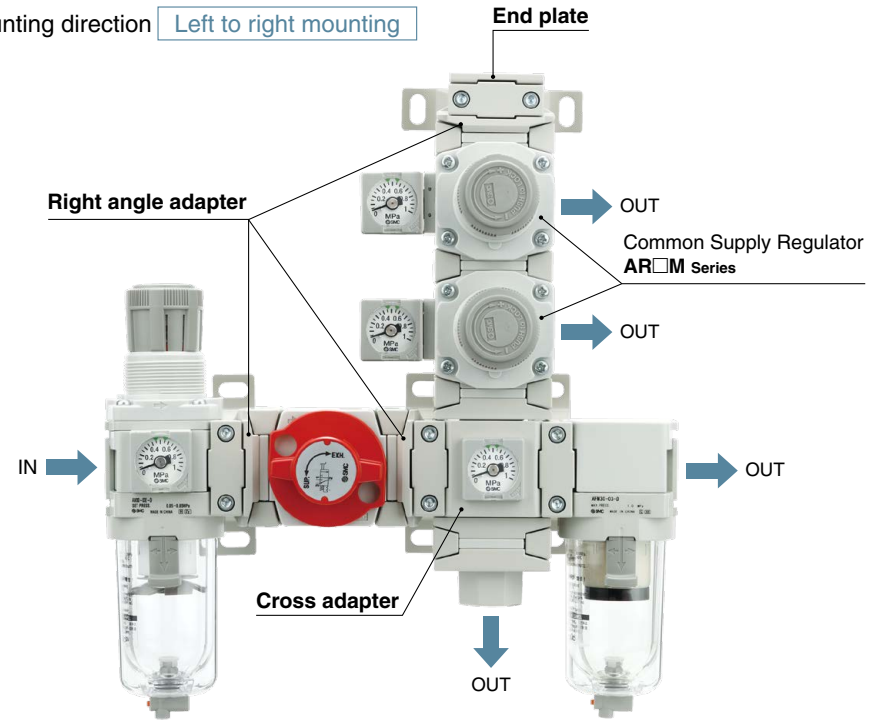

The AR□M series catalog can be viewed here.

Size conversion is possible Flow capacity UP Extended maintenance cycle

Reducing Adapter

Modular connection with products 1 size larger (or 1 size smaller) is possible. p. 68

Convertible sizes
Size 20 ⟷ Size 30
Size 30 ⟷ Size 40

● Example of connection with an air preparation filter 1 size larger

When using the reducing adapter
1500 L/min (ANR)∗1

AR30 + AFF**40** + AM**40** + AMD**40**

Size UP

Existing model
750 L/min (ANR)∗1

AR30 + AFF**30** + AM**30** + AMD**30**

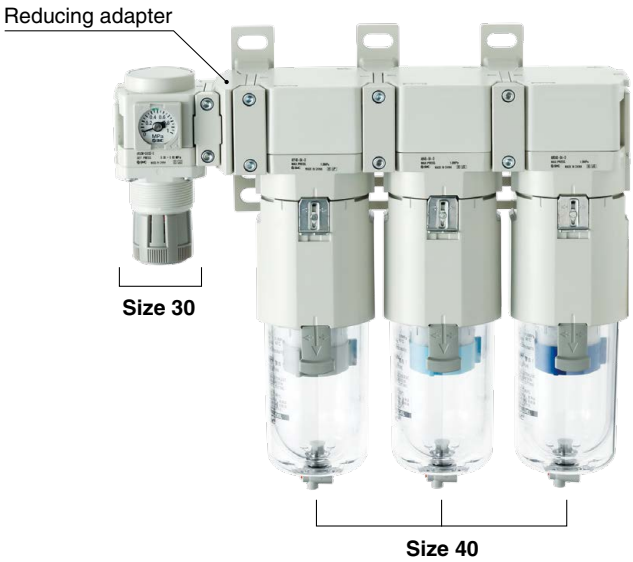

∗1 When at the max. flow capacity

The AFF/AM□ series catalog can be viewed here.

Simple Specials System

A system designed to respond quickly and easily to your special ordering needs

Simple Specials System

Short lead times

This system enables us to respond to your special needs (additional machining, accessory assembly, or the designing of a modular unit) and deliver your personalized products as quickly as standard products.

Repeat orders

Once we receive a simple special part number from one of your previous orders, we will process the order, manufacture the product, and deliver it to you as quickly as possible.

Please contact your local sales representative for more details.

Examples of Simple Specials

Combination example ❶

＊ Please contact your local sales representative for ordering procedures.

Pressure relief 3-port valve
VHS30-03-D ····· 1 pc.

Spacer with bracket
Y300T-D ····· 2 pcs.

Filter regulator with backflow function
AW30K-03E-D ····· 1 pc.

Pressure switch with
L-shaped piping adapter
IS10L-30-03-D ····· 1 pc.

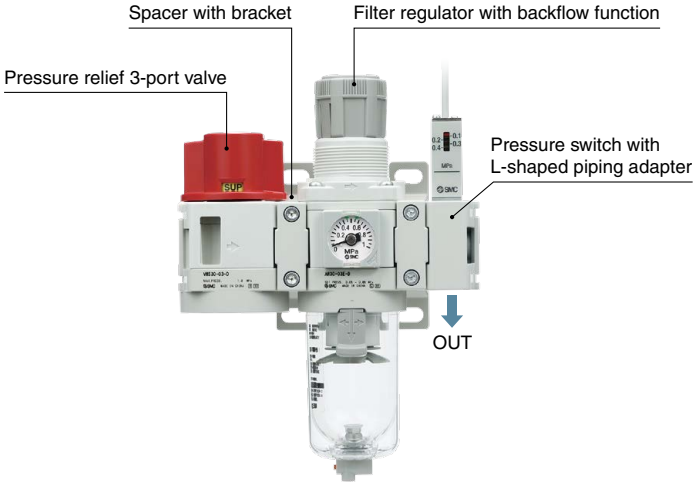

Combination example ❷

＊ Please contact your local sales representative for ordering procedures.

Filter regulator
AW30-03E1-D ····· 1 pc.

Spacer with bracket
Y300T-D ····· 1 pc.

L-shaped piping adapter
E300L-03-D ····· 1 pc.

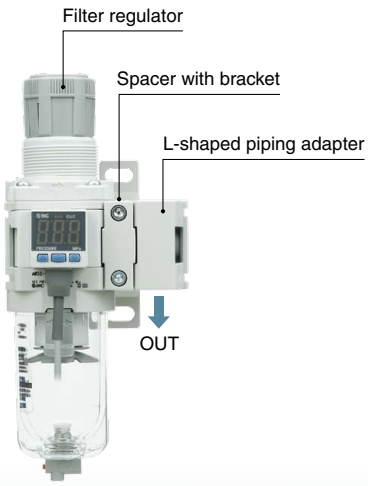

Combination example ③

＊ Please contact your local sales representative for ordering procedures.

L-shaped piping adapter
E300L-03-D ····· 1 pc.

Spacer with bracket
Y300T-D ····· 4 pcs.

Air filter
AF30-03-D ····· 1 pc.

Regulator
AR30-03E1-D ····· 1 pc.

Cross spacer
Y34-03-D ····· 1 pc.

Pressure relief 3-port valve
VHS30-03-D ····· 1 pc.

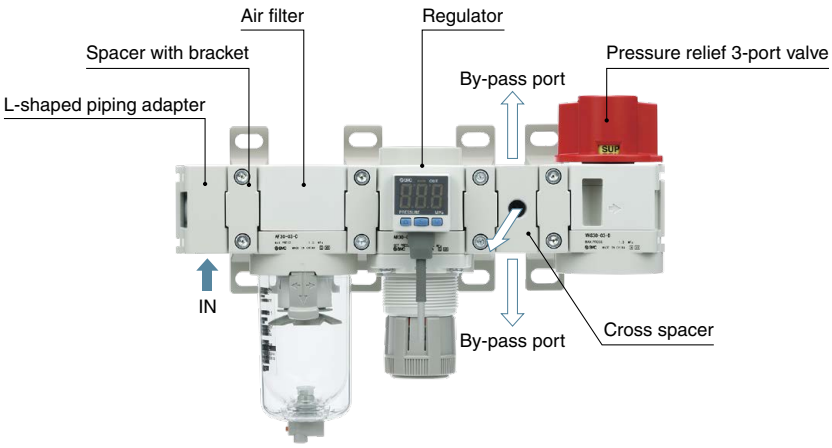

Combination example ④

＊ Please contact your local sales representative for ordering procedures.

Piping adapter
E300-03-D ····· 1 pc.

Spacer with bracket
Y300T-D ····· 3 pcs.

Filter regulator
AW30-03E-D ····· 1 pc.

Mist separator
AFM30-03-D ····· 1 pc.

Pressure switch with piping adapter
IS10E-30-03-D ····· 1 pc.

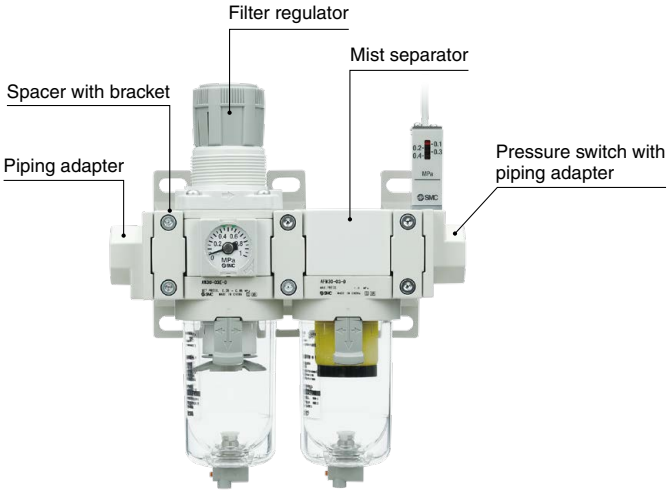

Combination example ⑤

＊ Please contact your local sales representative for ordering procedures.

Air filter
AF30-03-D ····· 1 pc.

Spacer with bracket
Y300T-D ····· 2 pcs.

Mist separator
AFM30-03-D ····· 1 pc.

Micro mist separator
AFD30-03-D ····· 1 pc.

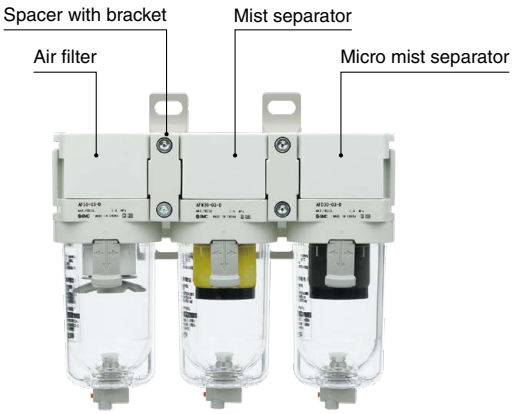

Combination example 6

∗ Please contact your local sales representative for ordering procedures.

Air combination
AC20B-02E-D ····· 1 pc.

Modular mounting type
2-port solenoid valve
JSXM21-AN302R-5G-U-F ····· 3 pcs.

Spacer with bracket
Y200T-D ····· 1 pc.

Spacer
Y200-D ····· 2 pcs.

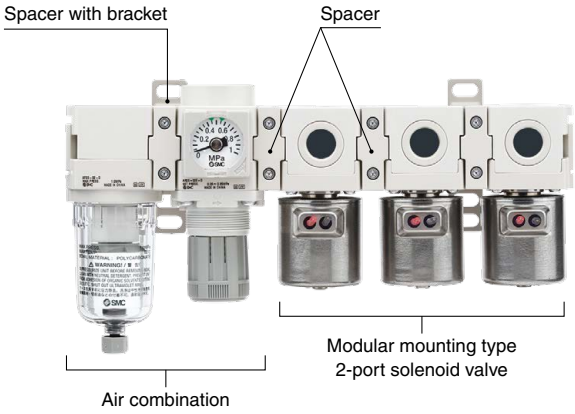

Combination example 7

∗ Please contact your local sales representative for ordering procedures.

Digital flow switch
PF3A701H-CS-M ····· 1 pc.

Air combination
AC30B-03E-D ····· 1 pc.

Spacer with bracket
Y300T-D ····· 2 pcs.

Piping adapter
E300-03-D ····· 1 pc.

∗ Avoid mounting the lubricator on the inlet side.
∗ If a pressure relief 3-port valve is installed on the inlet side of the digital flow switch, causing a backflow of air, the measured value will change.

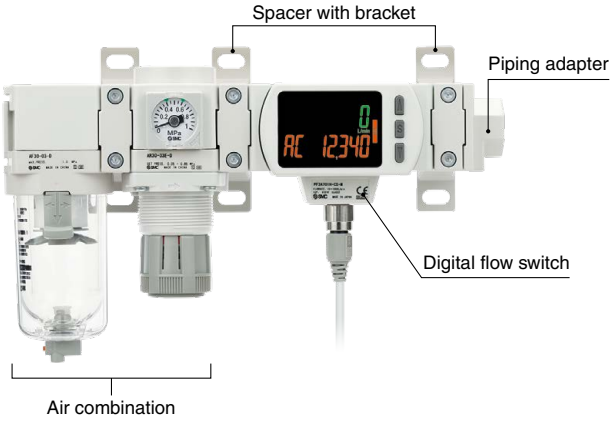

Combination example 8

∗ Please contact your local sales representative for ordering procedures.

Filter regulator
AW30-03E-D ····· 1 pc.

Residual pressure relief
3-port solenoid valve
with soft start-up function
VP546E-5DZ1-S ····· 1 pc.

Spacer with bracket
Y300T-D ····· 2 pcs.

Piping adapter
E300-03-D ····· 1 pc.

∗1 Connection threads are not available for the residual pressure relief 3-port solenoid valve. Select a piping adapter.
∗2 Refer to pages 57 and 59 for details on the spacer with bracket and piping adapter.

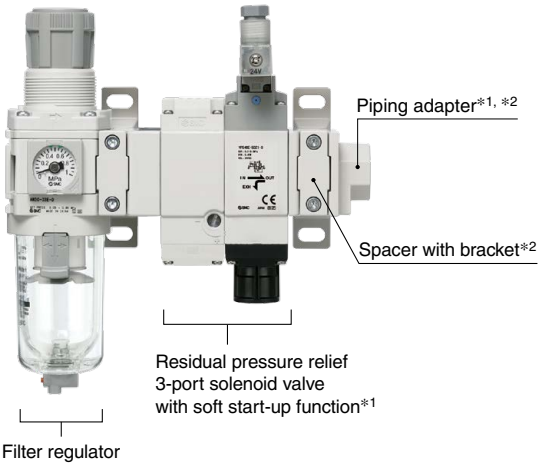

Combination example 9

＊ Please contact your local sales representative for ordering procedures.

Air filter
AF30-03-D ····· 1 pc.

Spacer with bracket
Y300T-D ····· 3 pcs.

Regulator
AR30-03E-D ····· 1 pc.

Check valve
AKM3000-02-A ····· 1 pc.

Lubricator
AL30-03-D ····· 1 pc.

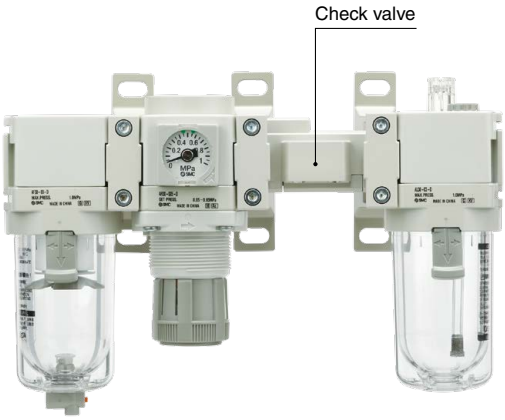

Connectable Modular Components

Common Supply Regulator
AR□M(K)-D

Residual Pressure Relief 3-Port Solenoid Valve
VP546E/746E

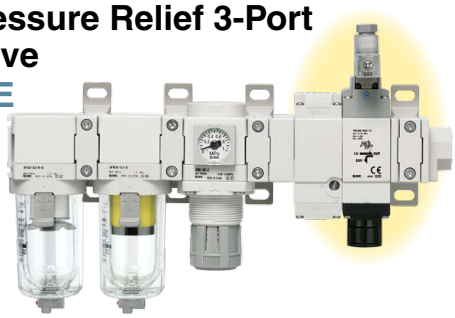

Mist Separator Regulator
AWM-D

Micro Mist Separator Regulator
AWD-D

3-Port Solenoid Valve/ Residual Pressure Release Valve with Detection of Main Valve Position
VP546/746

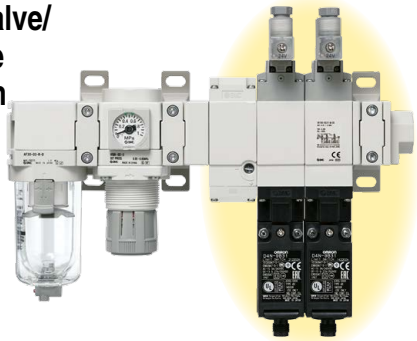

Compressed Air Preparation Filter
Line Filter **AFF**
Mist Separator **AM**
Micro Mist Separator **AMD**
Activated Carbon Filter **AMK**

Direct Operated/Pilot Operated 2-Port Solenoid Valve
JSX/JSX□

OSHA Standard Compliant Pressure Relief 3-Port Valve with Locking Holes
VHS□-D/VHS□W-D

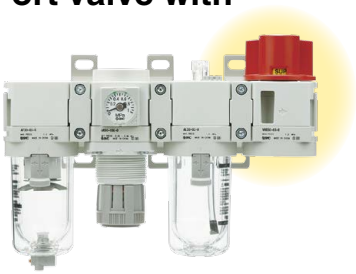

3-Color Display Digital Flow Switch
PF3A7/8□H(-L)

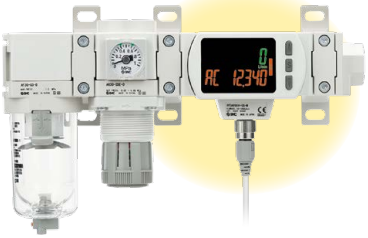

5-Port Solenoid Valve
SY3000/5000-X990

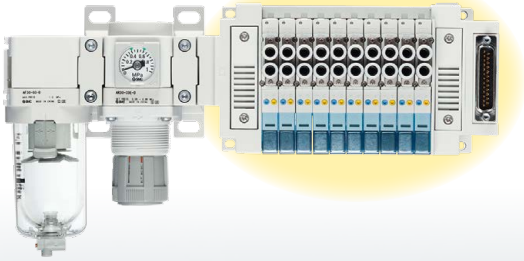

CONTENTS

Modular F.R.L. Units *AC Series*

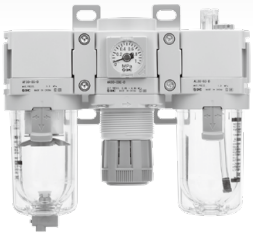

Air Combination: Air Filter + Regulator + Lubricator
AC20-D to AC60-D

How to Order ..... p. 17
Standard Specifications ..... p. 18
Flow Rate Characteristics ..... p. 19
Pressure Characteristics ..... p. 20
Dimensions ..... p. 21

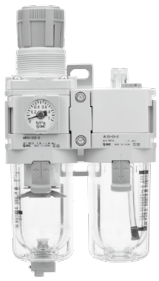

Air Combination: Filter Regulator + Lubricator
AC20A-D to AC60A-D

How to Order ..... p. 25
Standard Specifications ..... p. 26
Dimensions ..... p. 27

Air Combination: Air Filter + Regulator
AC20B-D to AC60B-D

How to Order ..... p. 31
Standard Specifications ..... p. 32
Dimensions ..... p. 33

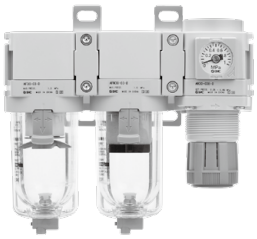

Air Combination: Air Filter + Mist Separator + Regulator
AC20C-D to AC40C-D

How to Order ..... p. 39
Standard Specifications ..... p. 40
Dimensions ..... p. 41

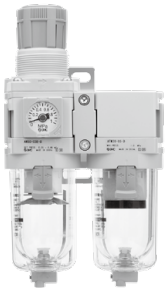

Air Combination: Filter Regulator + Mist Separator
AC20D-D to AC40D-D

How to Order ..... p. 47
Standard Specifications ..... p. 48
Dimensions ..... p. 49

Option / Accessory / Attachment Part No. List ..... p. 56
Accessories (Spacer / Spacer with Bracket) ..... p. 57
Attachments ..... p. 58
Specific Product Precautions ..... p. 71

Modular Type Air Filter AF Series

How to Order ..... p. 74
Standard Specifications, Bowl Assembly/Part Nos., Option/Part Nos., Replacement Parts ..... p. 75
Flow Rate Characteristics ..... p. 76
Working Principle: Float Type Auto Drain ..... p. 77
Operating State and Proper Use of Float Type Auto Drain ..... p. 78
Dimensions ..... p. 79
Made to Order ..... p. 81
Specific Product Precautions ..... p. 83

Modular Type Mist Separator/Micro Mist Separator AFM/AFD Series

How to Order ..... p. 85
Standard Specifications, Bowl Assembly/Part Nos., Option/Part Nos., Replacement Parts ..... p. 86
Flow Rate Characteristics ..... p. 87
Dimensions ..... p. 88
Made to Order ..... p. 89
Specific Product Precautions ..... p. 91

Modular Type Regulator AR Series

How to Order ..... p. 93
Standard Specifications, Option/Part Nos., Replacement Parts ..... p. 95
Flow Rate Characteristics ..... p. 96
Pressure Characteristics ..... p. 97
Dimensions ..... p. 98
Made to Order ..... p. 101
Specific Product Precautions ..... p. 103

Modular Type Lubricator AL Series

How to Order ..... p. 106
Standard Specifications, Bowl Assembly/Part Nos., Option/Part Nos., Replacement Parts ..... p. 107
Flow Rate Characteristics ..... p. 108
Dimensions ..... p. 109
Specific Product Precautions ..... p. 111

Modular Type Filter Regulator AW Series

How to Order ..... p. 113
Standard Specifications, Bowl Assembly/Part Nos. ..... p. 115
Option/Part Nos., Replacement Parts ..... p. 116
Flow Rate Characteristics ..... p. 117
Pressure Characteristics ..... p. 118
Dimensions ..... p. 119
Made to Order ..... p. 125
Option ..... p. 128
Specific Product Precautions ..... p. 129

Related Product: Digital Pressure Switch/ISE35-X523 ..... p. 130
International Standard ISO 8573-1:2010 ..... p. 131

Air Combination

Air Filter + Regulator + Lubricator

AC20-D to AC60-D

Symbol

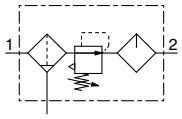

How to Order

AC 30 – ☐ 03 DE – ☐ – ☐ – D

❶ ❷ ❸ ❹ ❺ ❻

Option and Semi-standard Symbol Selection

- Select one each for **a** to **j**.
- When more than one specification is required, indicate in alphanumeric order.

Example) AC30-F03DE1-16NR-D

				Symbol	Description	❶ Body size 20	30	40	50	60
❷	Pipe thread type			Nil	Rc	●	●	●	●	●
				N*1	NPT	●	●	●	●	●
				F*2	G	●	●	●	●	●
				+						
❸	Port size			01	1/8	●	—	—	—	—
				02	1/4	●	●	●	—	—
				03	3/8	—	●	●	—	—
				04	1/2	—	—	●	—	—
				06	3/4	—	—	●	●	—
				10	1	—	—	—	●	●
				+						
❹	Option*3	a	Float type auto drain	Nil	Without auto drain	●	●	●	●	●
				C*4	N.C. (Normally closed) Drain port is closed when pressure is not applied.	●	●	●	●	●
				D*5	N.O. (Normally open) Drain port is open when pressure is not applied.	—	●	●	●	●
				+						
		b	Pressure gauge*6, *7	Nil	Without pressure gauge	●	●	●	●	●
				E	Square embedded type pressure gauge (with limit indicator)	●	●	●	●	●
				G	Round type pressure gauge (with limit indicator)	●	●	●	●	●
				M	Round type pressure gauge (with color zone)	●	●	●	●	●
			Digital pressure switch	E1	Output: NPN output, Electrical entry: Wiring bottom entry	●	●	●	●	●
				E2	Output: NPN output, Electrical entry: Wiring top entry	●	●	●	●	●
				E3	Output: PNP output, Electrical entry: Wiring bottom entry	●	●	●	●	●
				E4	Output: PNP output, Electrical entry: Wiring top entry	●	●	●	●	●
				+						
❺	Attachment	c	Pressure relief 3-port valve	Nil	Without attachment	●	●	●	●	●
				V	Mounting position: AF + AR + AL + **VHS**	●	●	●	●	—
				+						
❻	Semi-standard	d	Set pressure*8	Nil	0.05 to 0.85 MPa setting	●	●	●	●	●
				1	0.02 to 0.2 MPa setting	●	●	●	●	●
				+						
		e	Bowl*9	Nil	Polycarbonate bowl	●	●	●	●	●
				2	Metal bowl	●	●	●	●	●
				6	Nylon bowl	●	●	●	●	●
				8	Metal bowl with level gauge	—	●	●	●	●
				C	With bowl guard	●	—*10	—*10	—*10	—*10
				6C	With bowl guard (Nylon bowl)	●	—*11	—*11	—*11	—*11
				+						
		f	Air filter drain port*12	Nil	With drain cock	●	●	●	●	●
				J*13	Drain guide 1/8	●	—	—	—	—
					Drain guide 1/4	—	●	●	●	●
				W*14	Drain cock with barb fitting (for ø6 x ø4 nylon tube)	—	●	●	●	●
				+						
		g	Lubricator lubricant exhaust port	Nil	Without drain cock	●	●	●	●	●
				3*15	Lubricator with drain cock	●	●	●	●	●

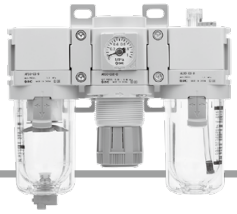

AC30-D

			Symbol	Description	❶ Body size 20	30	40	50	60
❻ Semi-standard	h	Exhaust mechanism	Nil	Relieving type	●	●	●	●	●
			N	Non-relieving type	●	●	●	●	●
			+						
	i	Flow direction	Nil	Flow direction: Left to right	●	●	●	●	●
			R	Flow direction: Right to left	●	●	●	●	●
			+						
	j	Unit	Nil	Unit on product label: MPa, °C, Pressure gauge in SI units: MPa	●	●	●	●	●
			Z*16	Unit on product label: psi, °F, Pressure gauge: MPa/psi dual scale	○*18	○*18	○*18	○*18	○*18
			ZA*17	Digital pressure switch: With unit selection function	△*19	△*19	△*19	△*19	△*19

*1 Drain guide is NPT1/8 (applicable to the AC20-D) and NPT1/4 (applicable to the AC30-D to AC60-D). The auto drain port comes with a ø3/8" One-touch fitting (applicable to the AC30-D to AC60-D).
*2 Drain guide is G1/8 (applicable to the AC20-D) and G1/4 (applicable to the AC30-D to AC60-D).
*3 Options G and M are not assembled and supplied loose at the time of shipment.
*4 When pressure is not applied, condensate which does not start the auto drain mechanism will be left in the bowl. Releasing the residual condensate before ending operations for the day is recommended.
*5 If the compressor is small (0.75 kW, discharge flow is less than 100 L/min (ANR)), air leakage from the drain cock may occur during the start of operations. N.C. type is recommended.
*6 When the pressure gauge is attached, a 1.0 MPa pressure gauge will be fitted for standard (0.85 MPa) type. 0.4 MPa pressure gauge for 0.2 MPa type.
*7 When no pressure gauge or pressure gauge "G" or "M" is selected, it is not possible to change to an "E," "E1," "E2," "E3," or "E4" later.
*8 Pressure can be set higher than the specification pressure in some cases, but use pressure within the specification range.
*9 Refer to chemical data on pages 83 and 111 for chemical resistance of the bowl.
*10 A bowl guard is provided as standard equipment (polycarbonate).
*11 A bowl guard is provided as standard equipment (nylon).
*12 The combination of float type auto drain C and D is not available.
*13 Without a valve function
*14 The combination of metal bowl 2 and 8 is not available.
*15 When choosing with W: Air filter drain port, the drain cock of a lubricator will be with barb fittings.
*16 For the pipe thread type: NPT
This product is for overseas use only according to the New Measurement Act. (The SI unit type is provided for use in Japan.)
Cannot be used with M: Round type pressure gauge (with color zone). Available by request for special.
The digital pressure switch will be equipped with the unit selection function, setting to psi initially.
*17 For options: E1, E2, E3, E4
This product is for overseas use only according to the New Measurement Act. (The SI unit is provided for use in Japan.)
*18 ○: For the pipe thread type: NPT only
*19 △: Select with options: E1, E2, E3, E4.

Standard Specifications

Model			AC20-D	AC30-D	AC40-D	AC40-06-D	AC50-D	AC60-D
Component	Air Filter	[AF]	AF20-D	AF30-D	AF40-D	AF40-06-D	AF50-D	AF60-D
	Regulator	[AR]	AR20-D	AR30-D	AR40-D	AR40-06-D	AR50-D	AR60-D
	Lubricator	[AL]	AL20-D	AL30-D	AL40-D	AL40-06-D	AL50-D	AL60-D
Port size			1/8, 1/4	1/4, 3/8	1/4, 3/8, 1/2	3/4	3/4, 1	1
Pressure gauge port size*1		[AR]	1/8					
Fluid			Air					
Ambient and fluid temperatures*2			–5 to 60°C (No freezing)					
Proof pressure			1.5 MPa					
Max. operating pressure			1.0 MPa					
Auto drain minimum operating pressure	N.C.	[AF]	0.1 MPa	0.15 MPa				
	N.O.	[AF]	—	0.1 MPa				
Set pressure range		[AR]	0.05 to 0.85 MPa					
Nominal filtration rating*3		[AF]	5 µm					
Compressed air purity class*4			ISO 8573-1:2010 [6 : 4 : –]*5					
Drain capacity		[AF]	8 cm³	25 cm³	45 cm³			
Min. dripping flow rate*6		[AL]	15 L/min (ANR)	Port size 1/4: 30 L/min (ANR) Port size 3/8: 40 L/min (ANR)	Port size 1/4: 30 L/min (ANR) Port size 3/8: 40 L/min (ANR) Port size 1/2: 50 L/min (ANR)	50 L/min (ANR)	190 L/min (ANR)	220 L/min (ANR)
Oil capacity		[AL]	25 cm³	55 cm³	135 cm³			
Recommended lubricant		[AL]	Class 1 turbine oil (ISO VG32)					
Bowl material		[AF/AL]	Polycarbonate					
Bowl guard		[AF/AL]	Semi-standard (Steel)	Standard (Polycarbonate)				
Construction		[AR]	Relieving type					
Weight			0.38 kg	0.75 kg	1.42 kg	1.55 kg	3.34 kg	3.60 kg

*1 Pressure gauge connection threads are not available for F.R.L. unit with a square embedded type pressure gauge or with a digital pressure switch.
*2 –5 to 50°C for the products with the digital pressure switch
*3 For the following conditions in accordance with [Test condition: ISO 8573-4:2001 compliant, Test method ISO 12500-3:2009 compliant]
Conditions: When a new element is used, and the flow capacity, inlet pressure, and the amount of solid bodies on the filter inlet side are stable
*4 The compressed air purity class is indicated based on ISO 8573-1:2010 Compressed air – Part 1: Contaminants and purity classes.
For details on this standard, refer to page 131.
*5 The compressed air quality class on the inlet side is [7 : 4 : 4].
*6 · The flow rate is 5 drops or greater/min under the following conditions: Inlet pressure of 0.5 MPa; Class 1 turbine oil (ISO VG32); Temperature at 20°C; Oil adjustment valve fully open.
· For a circuit that repeatedly turns ON and OFF on the outlet side, make the adjustment so that the average air consumption per minute becomes the minimum dripping flow rate or more.

Flow Rate Characteristics (Representative values)

——— Inlet pressure: 1.0 MPa
- - - Inlet pressure: 0.7 MPa

AC20-D

Rc1/4

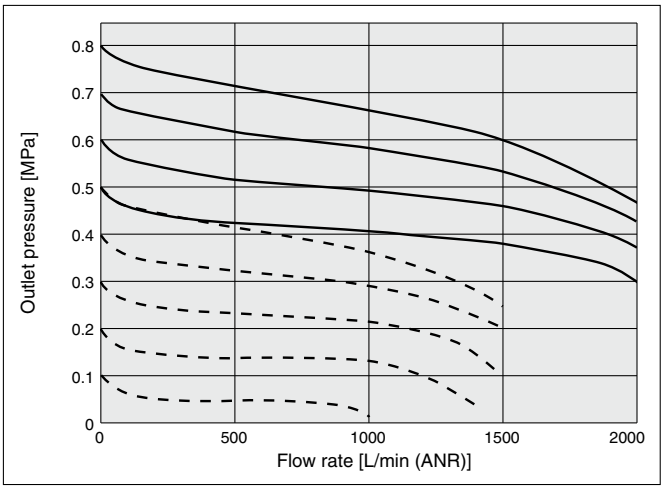

AC30-D

Rc3/8

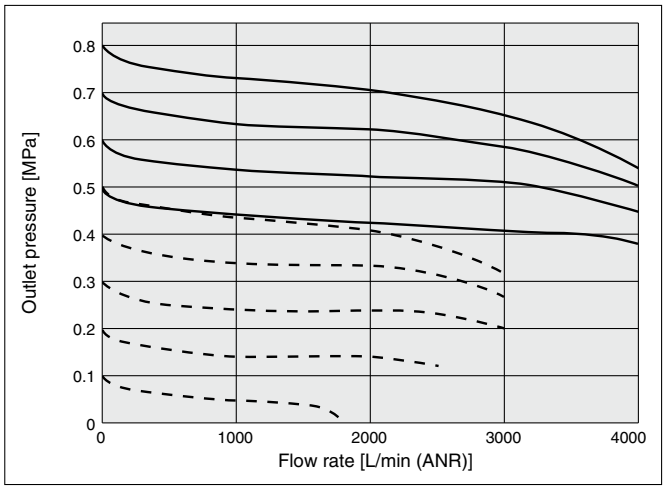

AC40-D

Rc1/2

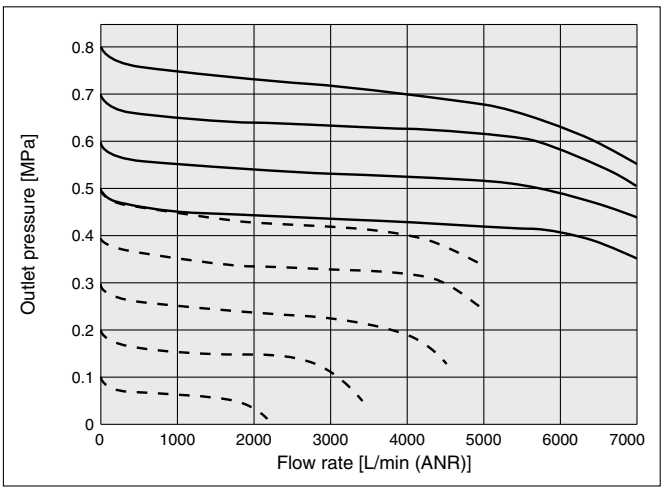

AC40-06-D

Rc3/4

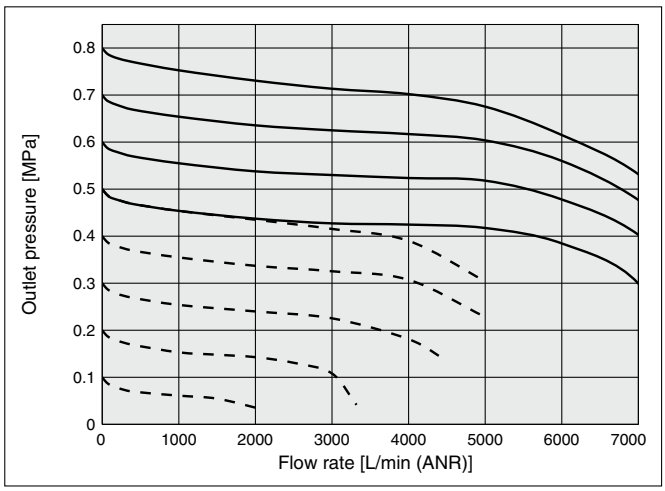

AC50-D

Rc1

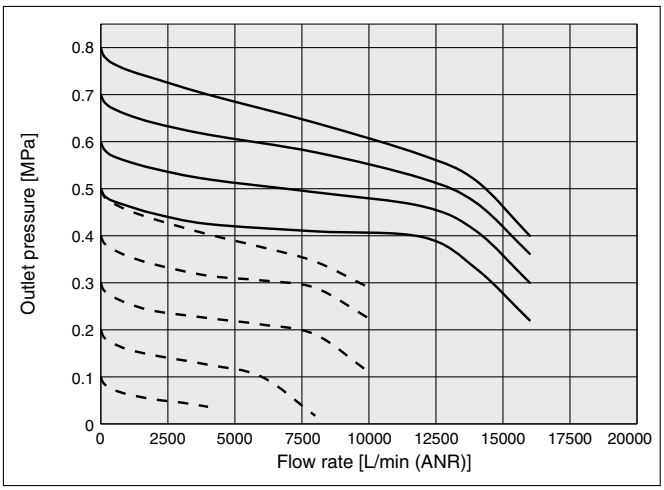

AC60-D

Rc1

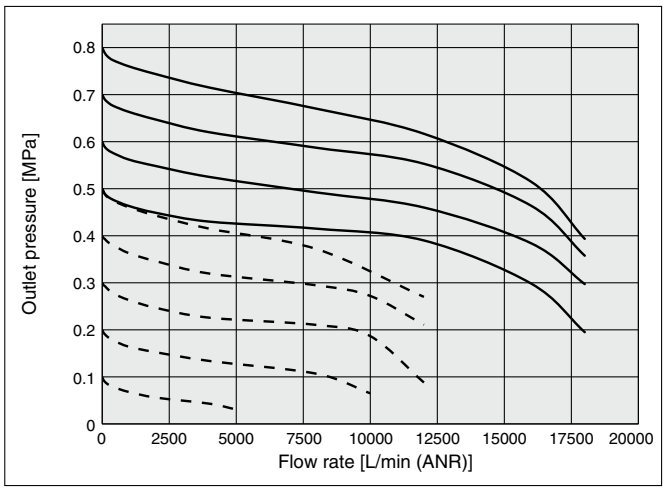

Pressure Characteristics (Representative values)

Conditions: Inlet pressure of 0.7 MPa, Outlet pressure of 0.2 MPa, Flow rate 20 L/min (ANR)

AC20-D

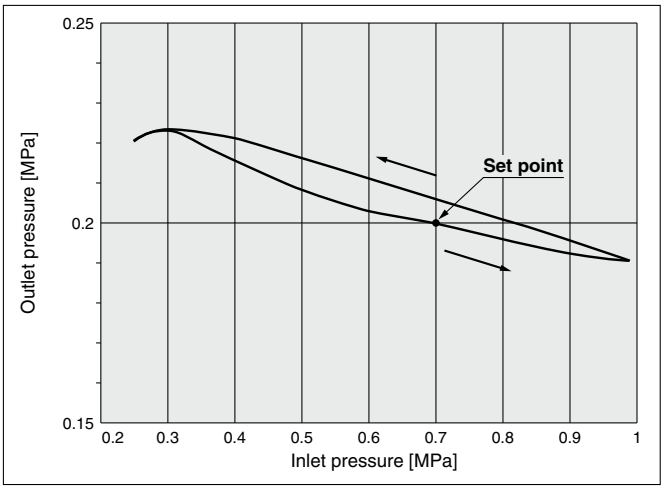

AC30-D

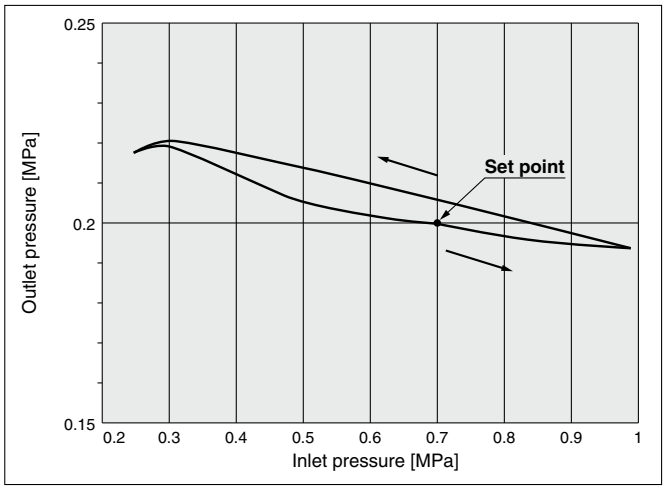

AC40-D

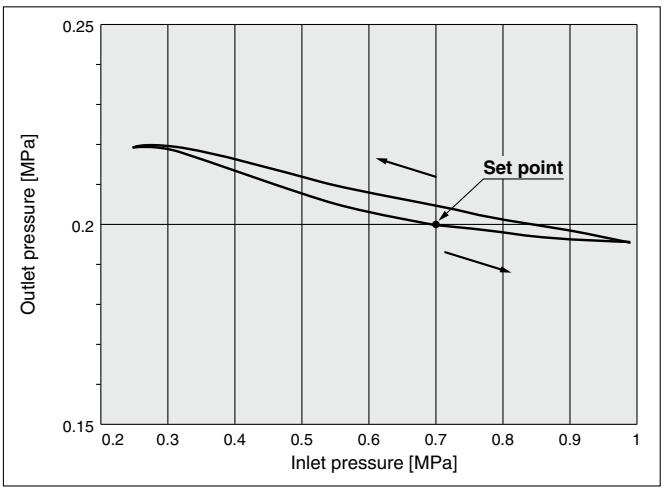

AC40-06-D

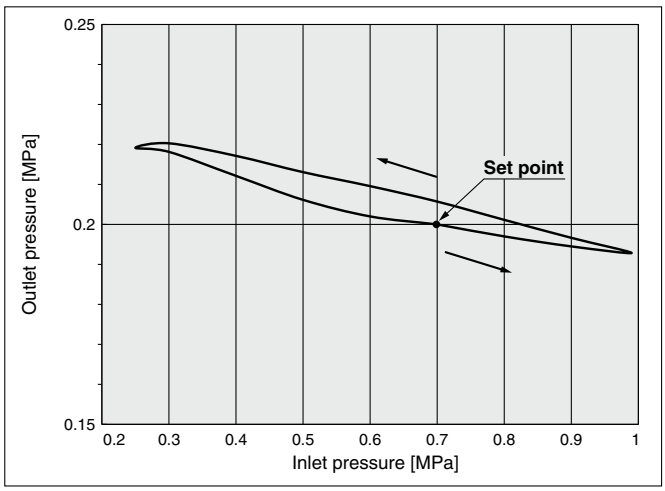

AC50-D

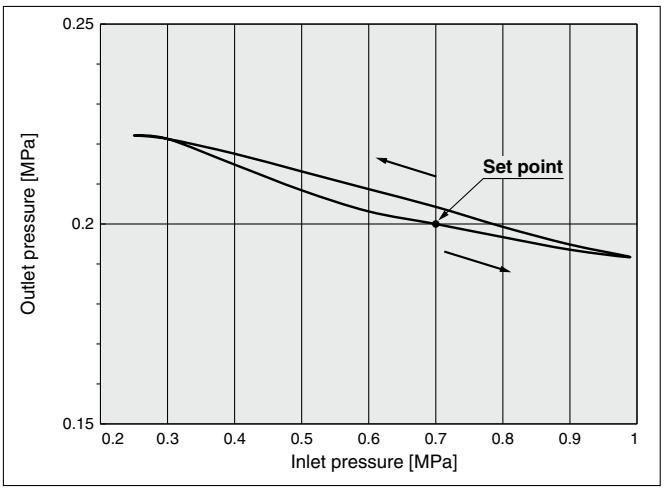

AC60-D

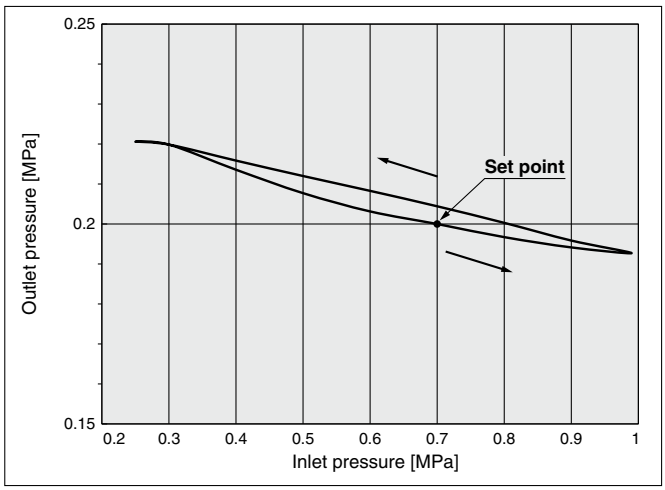

Dimensions

AC20-D

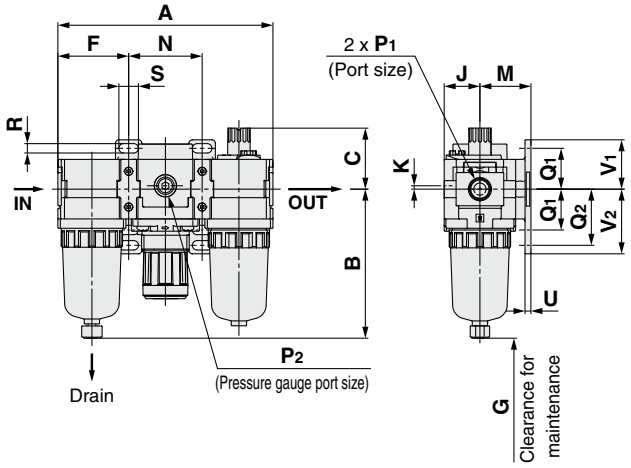

AC30-D

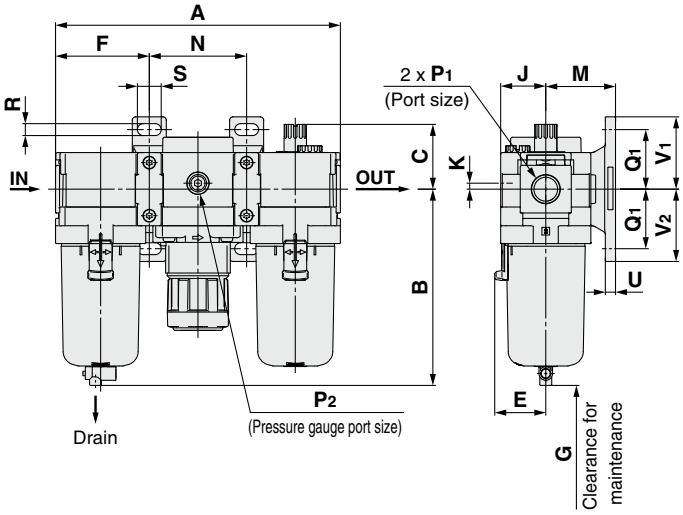

AC40-D to AC40-06-D

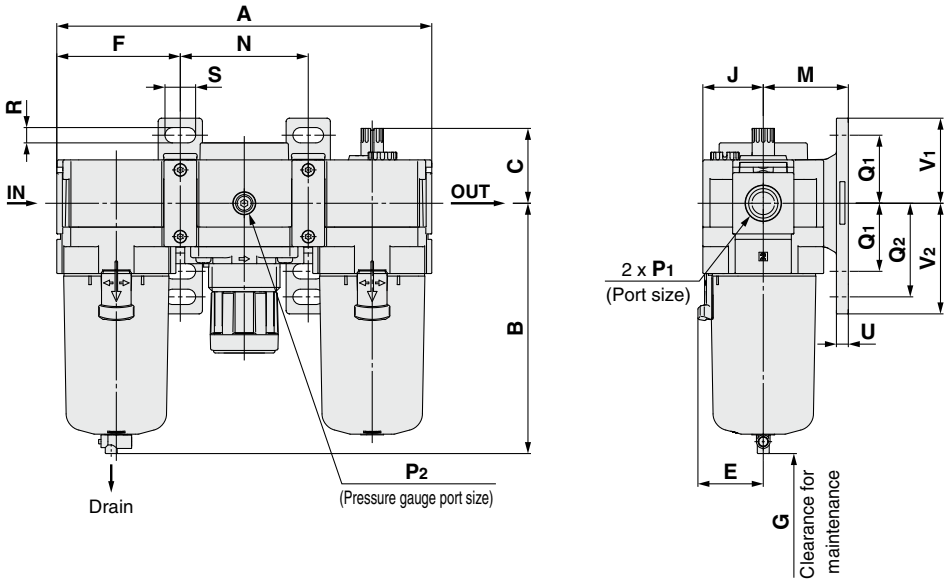

AC50-D to AC60-D

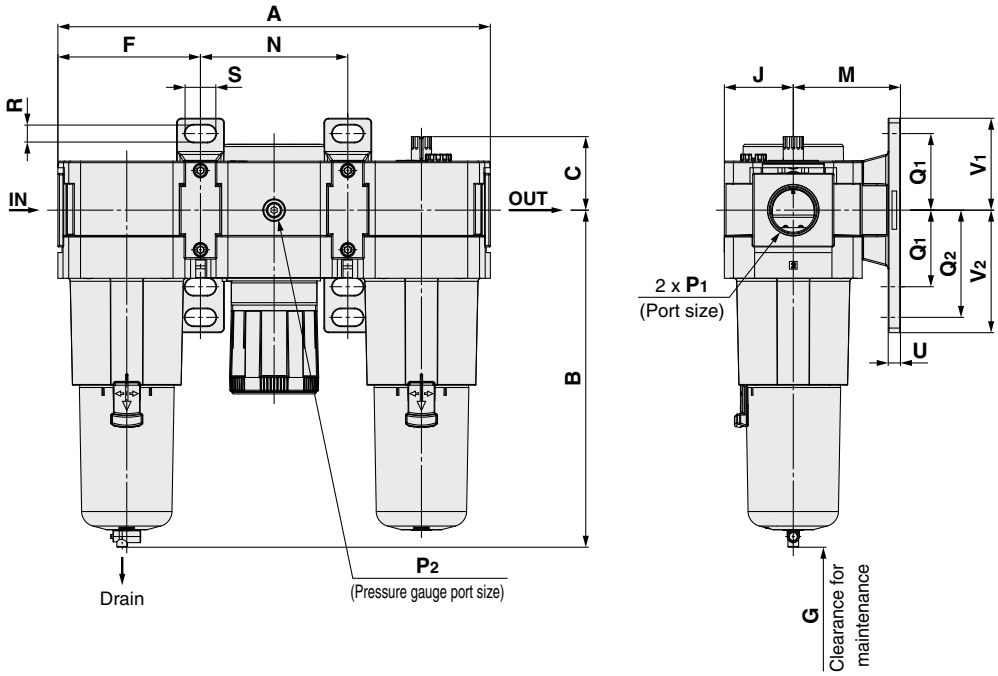

Applicable model	Optional specifications			
	Square embedded type pressure gauge	Digital pressure switch	Round type pressure gauge	Round type pressure gauge (with color zone)
AC20-D to AC60-D	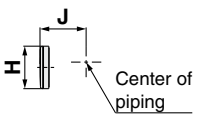	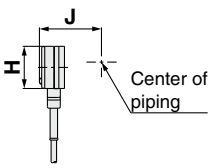	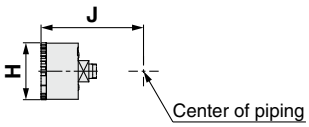	

Applicable model	Optional specifications	Semi-standard					
	With auto drain	PC/PA bowl		Metal bowl		Metal bowl with level gauge	
		Drain cock with barb fitting	With drain guide	With drain cock	With drain guide	With drain cock	With drain guide
AC20-D	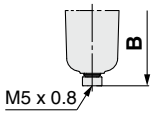		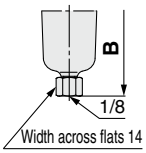	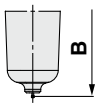	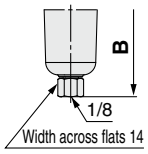		
AC30-D to AC60-D	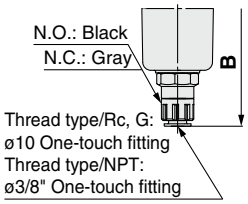	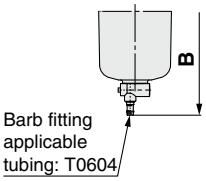	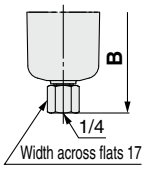	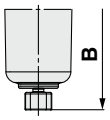	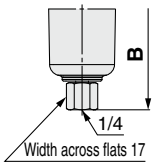	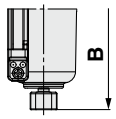	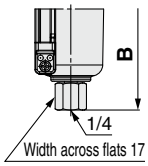

Model	Standard specifications																		
											Bracket mount								
	P_1	P_2	A	B	C	E	F	G	J	K	M	N	Q_1	Q_2	R	S	U	V_1	V_2
AC20-D	1/8, 1/4	1/8	126.4	87.6	35.9	—	41.6	60	21	2	30	43.2	24	33	5.5	11.5	3.5	29	38
AC30-D	1/4, 3/8	1/8	167.4	115.4	38.1	30	55.1	80	26.5	3.5	41	57.2	35	—	7	14	6	42.5	42.5
AC40-D	1/4, 3/8, 1/2	1/8	220.4	147.1	44	38.4	72.6	110	35.5	—	50	75.2	40	55	9	18	7	50	65
AC40-06-D	3/4	1/8	235.4	149.1	44	38.4	77.6	110	35.5	—	50	80.2	40	55	9	18	7	50	65
AC50-D	3/4, 1	1/8	282.4	220.1	48	—	93.1	110	45	—	70	96.2	50	70	11	20	8	60	80
AC60-D	1	1/8	297.4	234.1	48	—	98.1	110	45	—	70	101.2	50	70	11	20	8	60	80

Model	Optional specifications									Semi-standard specifications					
	Square embedded type pressure gauge		Digital pressure switch		Round type pressure gauge		Round type pressure gauge (with color zone)		With auto drain	PC/PA bowl		Metal bowl		Metal bowl with level gauge	
										With barb fitting	With drain guide	With drain cock	With drain guide	With drain cock	With drain guide
	H	J	H	J	H	J	H	J	B	B	B	B	B	B	B
AC20-D	□28	27	□27.8	37.5	ø37.5	57.5	ø37.5	58.5	104.9	—	91.4	87.4	93.9	—	—
AC30-D	□28	32.5	□27.8	43	ø37.5	63	ø37.5	64	157.1	123.9	122.2	117.8	122.3	137.8	142.3
AC40-D	□28	41.5	□27.8	52	ø42.5	73	ø42.5	73	186.9	155.6	153.9	149.5	154	169.5	174
AC40-06-D	□28	41.5	□27.8	52	ø42.5	73	ø42.5	73	188.9	157.6	155.9	151.5	156	171.5	176
AC50-D	□28	51	□27.8	61.5	ø42.5	82.5	ø42.5	82.5	259.9	228.6	226.9	222.5	227	242.5	247
AC60-D	□28	51	□27.8	61.5	ø42.5	82.5	ø42.5	82.5	273.9	242.6	240.9	236.5	241	256.5	261

Dimensions: With Pressure Relief 3-Port Valve (V)

AC20-V-D

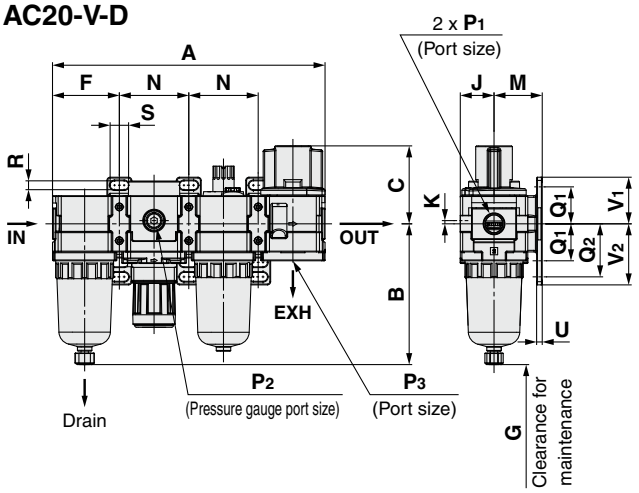

AC30-V-D

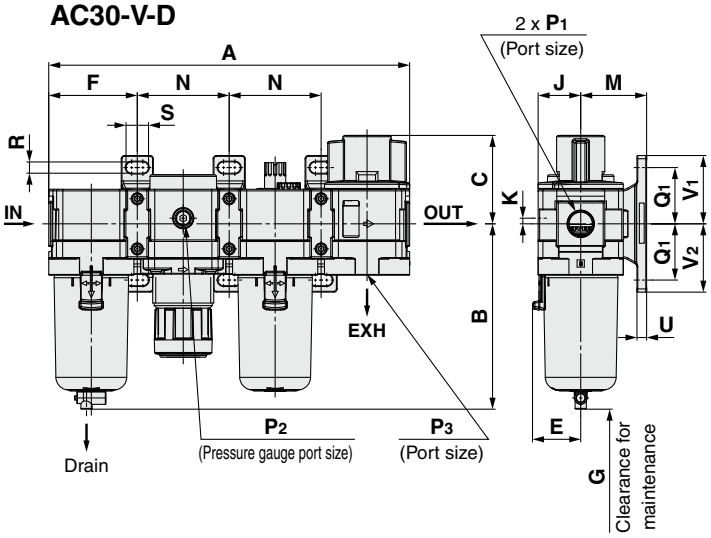

AC40-V-D to AC40-06-V-D

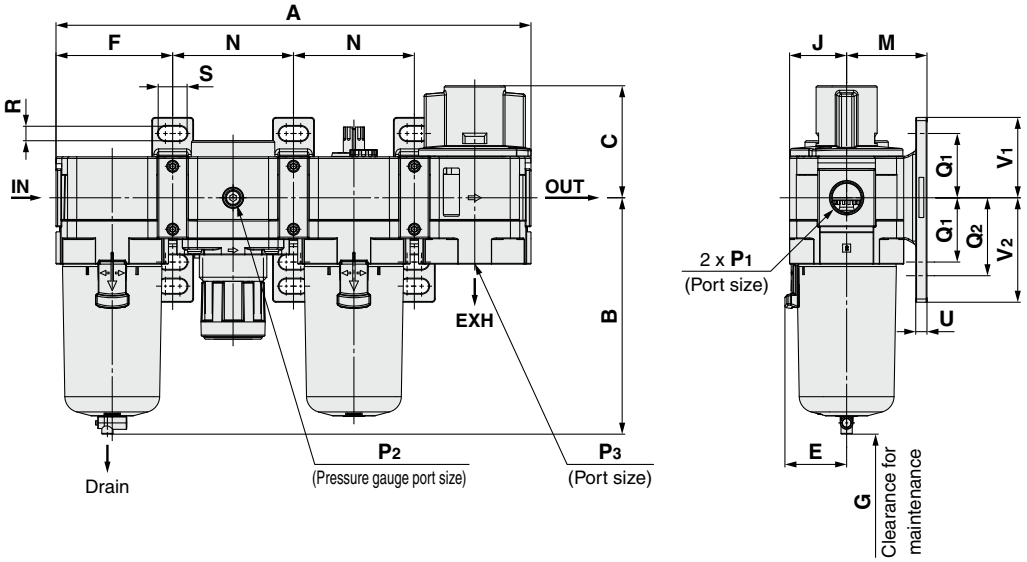

AC50-V-D

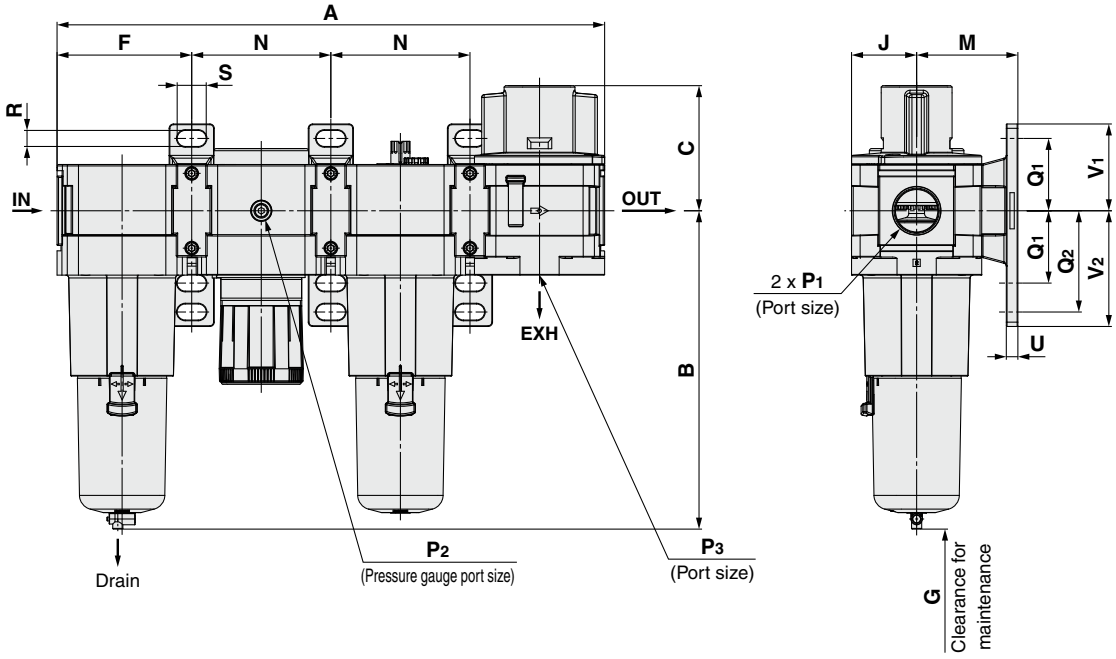

Applicable model	Optional specifications			
	Square embedded type pressure gauge	Digital pressure switch	Round type pressure gauge	Round type pressure gauge (with color zone)
AC20-V-D to AC50-V-D	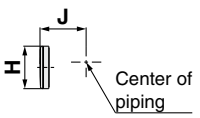	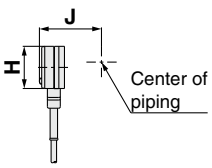	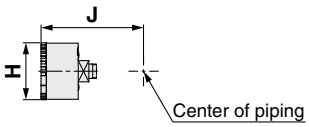	

Applicable model	Optional specifications	Semi-standard					
	With auto drain	PC/PA bowl		Metal bowl		Metal bowl with level gauge	
		Drain cock with barb fitting	With drain guide	With drain cock	With drain guide	With drain cock	With drain guide
AC20-V-D	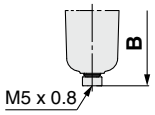		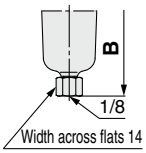	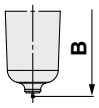	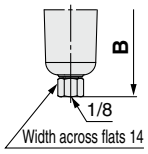		
AC30-V-D to AC50-V-D	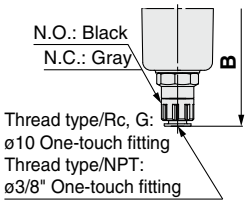	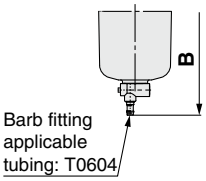	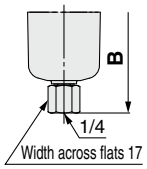	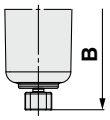	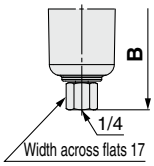	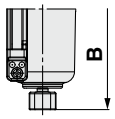	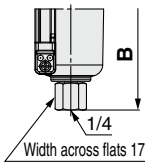

Model	Standard specifications																			
												Bracket mount								
	P_1	P_2	P_3	A	B	C	E	F	G	J	K	M	N	Q_1	Q_2	R	S	U	V_1	V_2
AC20-V-D	1/8, 1/4	1/8	1/8	169.6	87.6	48.5	—	41.6	60	21	2	30	43.2	24	33	5.5	11.5	3.5	29	38
AC30-V-D	1/4, 3/8	1/8	1/4	224.6	115.4	55	30	55.1	80	26.5	3.5	41	57.2	35	—	7	14	6	42.5	42.5
AC40-V-D	1/4, 3/8, 1/2	1/8	3/8	295.6	147.1	69.7	38.4	72.6	110	35.5	—	50	75.2	40	55	9	18	7	50	65
AC40-06-V-D	3/4	1/8	1/2	315.6	149.1	71.7	38.4	77.6	110	35.5	—	50	80.2	40	55	9	18	7	50	65
AC50-V-D	3/4, 1	1/8	1/2	378.6	220.1	86.5	—	93.1	110	45	—	70	96.2	50	70	11	20	8	60	80

Model	Optional specifications									Semi-standard specifications					
	Square embedded type pressure gauge		Digital pressure switch		Round type pressure gauge		Round type pressure gauge (with color zone)		With auto drain	PC/PA bowl		Metal bowl		Metal bowl with level gauge	
										With barb fitting	With drain guide	With drain cock	With drain guide	With drain cock	With drain guide
	H	J	H	J	H	J	H	J	B	B	B	B	B	B	B
AC20-V-D	□28	27	□27.8	37.5	ø37.5	57.5	ø37.5	58.5	104.9	—	91.4	87.4	93.9	—	—
AC30-V-D	□28	32.5	□27.8	43	ø37.5	63	ø37.5	64	157.1	123.9	122.2	117.8	122.3	137.8	142.3
AC40-V-D	□28	41.5	□27.8	52	ø42.5	73	ø42.5	73	186.9	155.6	153.9	149.5	154	169.5	174
AC40-06-V-D	□28	41.5	□27.8	52	ø42.5	73	ø42.5	73	188.9	157.6	155.9	151.5	156	171.5	176
AC50-V-D	□28	51	□27.8	61.5	ø42.5	82.5	ø42.5	82.5	259.9	228.6	226.9	222.5	227	242.5	247

Air Combination

Filter Regulator + Lubricator

AC20A-D to AC60A-D

Symbol

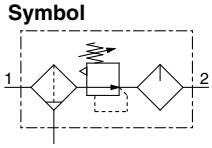

How to Order

AC 30 A – □ 03 DE – □ – □ – D

❶ ❷ ❸ ❹ ❺ ❻

Option and Semi-standard Symbol Selection

- Select one each for **a** to **j**.
- When more than one specification is required, indicate in alphanumeric order.

Example) AC30A-F03DE1-16NR-D

			Symbol	Description	❶ Body size 20	30	40	50	60
❷	Pipe thread type		Nil	Rc	●	●	●	●	●
			N*1	NPT	●	●	●	●	●
			F*2	G	●	●	●	●	●
			+						
❸	Port size		01	1/8	●	—	—	—	—
			02	1/4	●	●	●	—	—
			03	3/8	—	●	●	—	—
			04	1/2	—	—	●	—	—
			06	3/4	—	—	●	●	—
			10	1	—	—	—	●	●
			+						
❹	Option*3	a Float type auto drain	Nil	Without auto drain	●	●	●	●	●
			C*4	N.C. (Normally closed) Drain port is closed when pressure is not applied.	●	●	●	●	●
			D*5	N.O. (Normally open) Drain port is open when pressure is not applied.	—	●	●	●	●
			+						
		b Pressure gauge*6, *7	Nil	Without pressure gauge	●	●	●	●	●
			E	Square embedded type pressure gauge (with limit indicator)	●	●	●	●	●
			G	Round type pressure gauge (with limit indicator)	●	●	●	●	●
			M	Round type pressure gauge (with color zone)	●	●	●	●	●
		b Digital pressure switch	E1	Output: NPN output, Electrical entry: Wiring bottom entry	●	●	●	●	●
			E2	Output: NPN output, Electrical entry: Wiring top entry	●	●	●	●	●
			E3	Output: PNP output, Electrical entry: Wiring bottom entry	●	●	●	●	●
			E4	Output: PNP output, Electrical entry: Wiring top entry	●	●	●	●	●
			+						
❺	Attachment	c Pressure relief 3-port valve	Nil	Without attachment	●	●	●	●	●
			V	Mounting position: AW + AL + **VHS**	●	●	●	●	—
			+						
❻	Semi-standard	d Set pressure*8	Nil	0.05 to 0.85 MPa setting	●	●	●	●	●
			1	0.02 to 0.2 MPa setting	●	●	●	●	●
			+						
		e Bowl*9	Nil	Polycarbonate bowl	●	●	●	●	●
			2	Metal bowl	●	●	●	●	●
			6	Nylon bowl	●	●	●	●	●
			8	Metal bowl with level gauge	—	●	●	●	●
			C	With bowl guard	●	—*10	—*10	—*10	—*10
			6C	With bowl guard (Nylon bowl)	●	—*11	—*11	—*11	—*11
			+						
		f Filter regulator drain port*12	Nil	With drain cock	●	●	●	●	●
			J*13	Drain guide 1/8	●	—	—	—	—
				Drain guide 1/4	—	●	●	●	●
			W*14	Drain cock with barb fitting (for ø6 x ø4 nylon tube)	—	●	●	●	●
			+						
		g Lubricator lubricant exhaust port	Nil	Without drain cock	●	●	●	●	●
			3*15	Lubricator with drain cock	●	●	●	●	●
			+						
		h Exhaust mechanism	Nil	Relieving type	●	●	●	●	●
			N	Non-relieving type	●	●	●	●	●

AC30A-D

			Symbol	Description	❶ Body size 20	30	40	50	60
❻ Semi-standard	i	Flow direction	Nil	Flow direction: Left to right	●	●	●	●	●
			R	Flow direction: Right to left	●	●	●	●	●
			+						
	j	Unit	Nil	Unit on product label: MPa, °C, Pressure gauge in SI units: MPa	●	●	●	●	●
			Z*16	Unit on product label: psi, °F, Pressure gauge: MPa/psi dual scale	○*18	○*18	○*18	○*18	○*18
			ZA*17	Digital pressure switch: With unit selection function	△*19	△*19	△*19	△*19	△*19

*1 Drain guide is NPT1/8 (applicable to the AC20A-D) and NPT1/4 (applicable to the AC30A-D to AC60A-D). The auto drain port comes with a ø3/8" One-touch fitting (applicable to the AC30A-D to AC60A-D).
*2 Drain guide is G1/8 (applicable to the AC20A-D) and G1/4 (applicable to the AC30A-D to AC60A-D).
*3 Options G and M are not assembled and supplied loose at the time of shipment.
*4 When pressure is not applied, condensate which does not start the auto drain mechanism will be left in the bowl. Releasing the residual condensate before ending operations for the day is recommended.
*5 If the compressor is small (0.75 kW, discharge flow is less than 100 L/min (ANR)), air leakage from the drain cock may occur during the start of operations. N.C. type is recommended.
*6 When the pressure gauge is attached, a 1.0 MPa pressure gauge will be fitted for standard (0.85 MPa) type. 0.4 MPa pressure gauge for 0.2 MPa type.
*7 When no pressure gauge or pressure gauge "G" or "M" is selected, it is not possible to change to an "E," "E1," "E2," "E3," or "E4" later.
*8 Pressure can be set higher than the specification pressure in some cases, but use pressure within the specification range.
*9 Refer to chemical data on pages 111 and 129 for chemical resistance of the bowl.
*10 A bowl guard is provided as standard equipment (polycarbonate).
*11 A bowl guard is provided as standard equipment (nylon).
*12 The combination of float type auto drain C and D is not available.
*13 Without a valve function
*14 The combination of metal bowl 2 and 8 is not available.
*15 When choosing with W: Filter regulator drain port, the drain cock of a lubricator will be with barb fittings.
*16 For the pipe thread type: NPT
This product is for overseas use only according to the New Measurement Act. (The SI unit type is provided for use in Japan.)
Cannot be used with M: Round type pressure gauge (with color zone). Available by request for special.
The digital pressure switch will be equipped with the unit selection function, setting to psi initially.
*17 For options: E1, E2, E3, E4
This product is for overseas use only according to the New Measurement Act. (The SI unit is provided for use in Japan.)
*18 ○: For the pipe thread type: NPT only
*19 △: Select with options: E1, E2, E3, E4.

Standard Specifications

Model			AC20A-D	AC30A-D	AC40A-D	AC40A-06-D	AC50A-D	AC60A-D
Component	Filter Regulator	[AW]	AW20-D	AW30-D	AW40-D	AW40-06-D	AW60-D	AW60-D
	Lubricator	[AL]	AL20-D	AL30-D	AL40-D	AL40-06-D	AL50-D	AL60-D
Port size			1/8, 1/4	1/4, 3/8	1/4, 3/8, 1/2	3/4	3/4, 1	1
Pressure gauge port size*1		[AW]	1/8					
Fluid			Air					
Ambient and fluid temperatures*2			–5 to 60°C (No freezing)					
Proof pressure			1.5 MPa					
Max. operating pressure			1.0 MPa					
Auto drain minimum operating pressure	N.C.	[AW]	0.1 MPa	0.15 MPa				
	N.O.	[AW]	—	0.1 MPa				
Set pressure range		[AW]	0.05 to 0.85 MPa					
Nominal filtration rating*3		[AW]	5 μm					
Compressed air purity class*4			ISO 8573-1:2010 [6 : 4 : –]*5					
Drain capacity		[AW]	8 cm³	25 cm³	45 cm³			
Min. dripping flow rate*6		[AL]	15 L/min (ANR)	Port size 1/4: 30 L/min (ANR) Port size 3/8: 40 L/min (ANR)	Port size 1/4: 30 L/min (ANR) Port size 3/8: 40 L/min (ANR) Port size 1/2: 50 L/min (ANR)	50 L/min (ANR)	190 L/min (ANR)	220 L/min (ANR)
Oil capacity		[AL]	25 cm³	55 cm³	135 cm³			
Recommended lubricant		[AL]	Class 1 turbine oil (ISO VG32)					
Bowl material		[AW/AL]	Polycarbonate					
Bowl guard		[AW/AL]	Semi-standard (Steel)	Standard (Polycarbonate)				
Construction		[AW]	Relieving type					
Weight			0.31 kg	0.58 kg	1.12 kg	1.22 kg	2.90 kg	2.97 kg

*1 Pressure gauge connection threads are not available for F.R.L. unit with a square embedded type pressure gauge or with a digital pressure switch.
*2 –5 to 50°C for the products with the digital pressure switch
*3 For the following conditions in accordance with [Test condition: ISO 8573-4:2001 compliant, Test method ISO 12500-3:2009 compliant]
Conditions: When a new element is used, and the flow capacity, inlet pressure, and the amount of solid bodies on the filter inlet side are stable
*4 The compressed air purity class is indicated based on ISO 8573-1:2010 Compressed air – Part 1: Contaminants and purity classes.
For details on this standard, refer to page 131.
*5 The compressed air quality class on the inlet side is [7 : 4 : 4].
*6 · The flow rate is 5 drops or greater/min under the following conditions: Inlet pressure of 0.5 MPa; Class 1 turbine oil (ISO VG32); Temperature at 20°C; Oil adjustment valve fully open.
· For a circuit that repeatedly turns ON and OFF on the outlet side, make the adjustment so that the average air consumption per minute becomes the minimum dripping flow rate or more.

Dimensions

AC20A-D

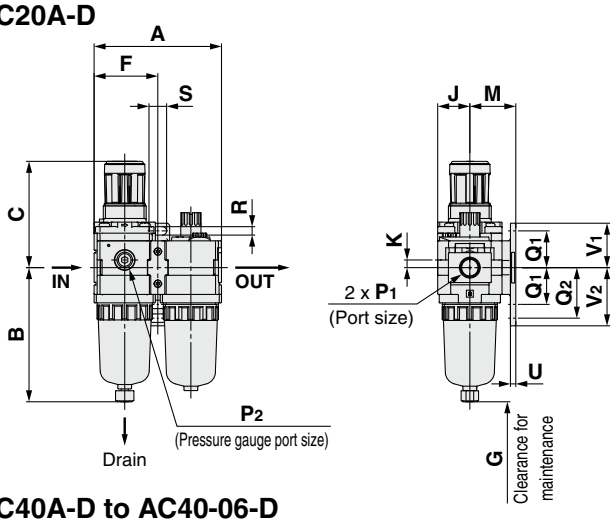

AC30A-D

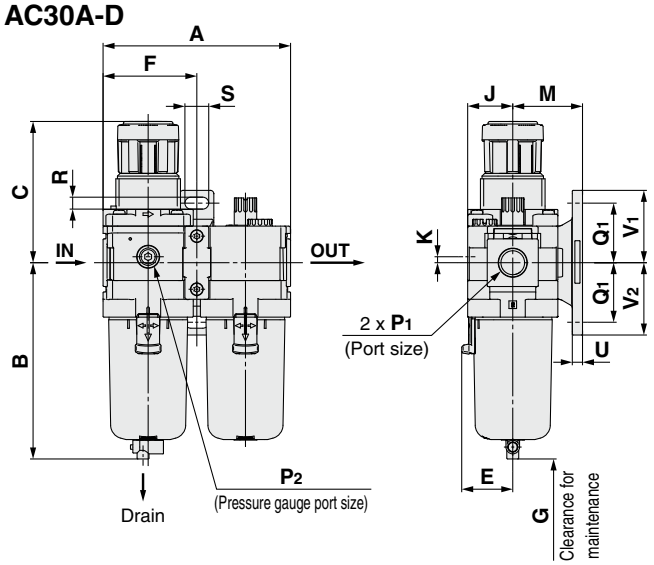

AC40A-D to AC40-06-D

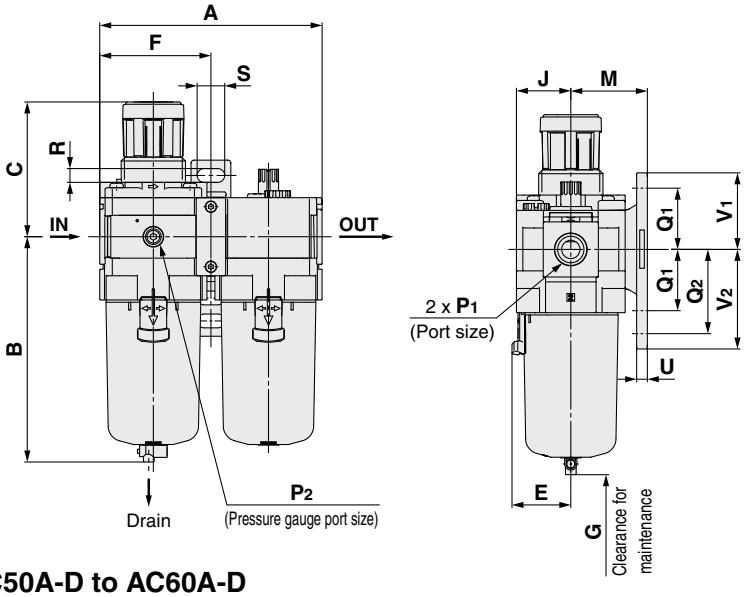

AC50A-D to AC60A-D

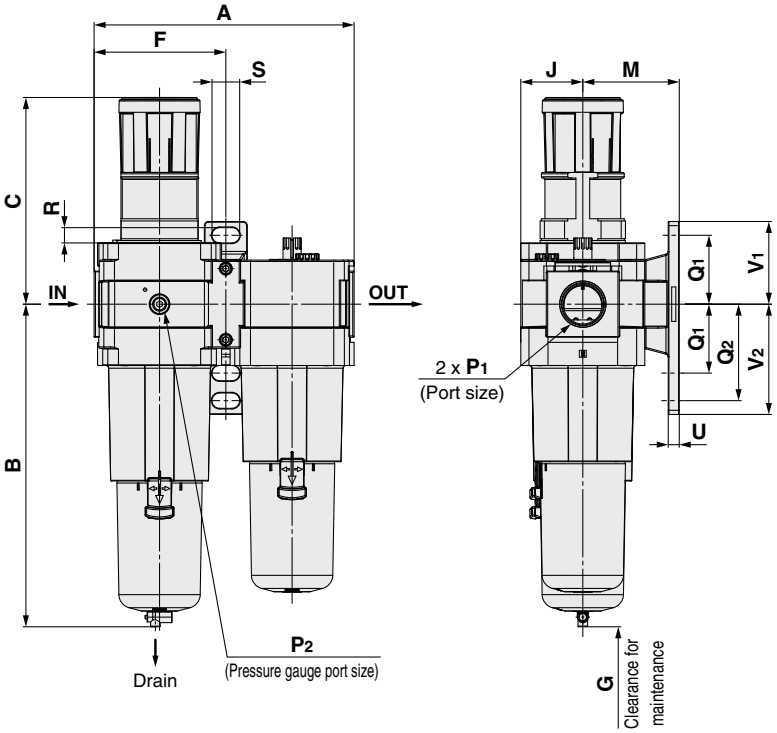

Applicable model	Optional specifications			
	Square embedded type pressure gauge	Digital pressure switch	Round type pressure gauge	Round type pressure gauge (with color zone)
AC20A-D to AC60A-D	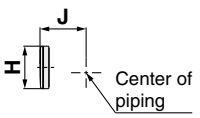	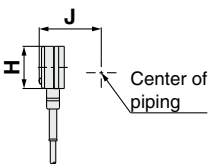	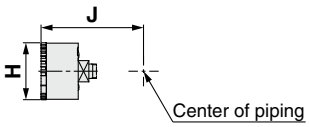	

Applicable model	Optional specifications	Semi-standard					
	With auto drain	PC/PA bowl		Metal bowl		Metal bowl with level gauge	
		Drain cock with barb fitting	With drain guide	With drain cock	With drain guide	With drain cock	With drain guide
AC20A-D	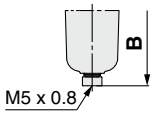		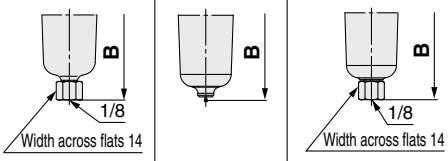				
AC30A-D to AC60A-D	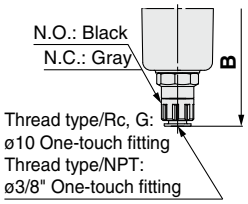	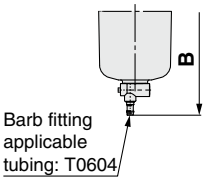	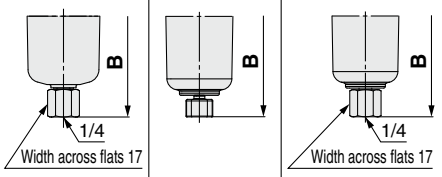				

Model	Standard specifications																	
											Bracket mount							
	P_1	P_2	A	B	C	E	F	G	J	K	M	Q_1	Q_2	R	S	U	V_1	V_2
AC20A-D	1/8, 1/4	1/8	83.2	87.6	71.8	—	41.6	60	21	5	30	24	33	5.5	11.5	3.5	29	38
AC30A-D	1/4, 3/8	1/8	110.2	115.4	86.5	30	55.1	80	26.5	3.5	41	35	—	7	14	6	42.5	42.5
AC40A-D	1/4, 3/8, 1/2	1/8	145.2	147.1	91.5	38.4	72.6	110	35.5	—	50	40	55	9	18	7	50	65
AC40A-06-D	3/4	1/8	155.2	149.1	93	38.4	77.6	110	35.5	—	50	40	55	9	18	7	50	65
AC50A-D	3/4, 1	1/8	191.2	234.1	155	—	98.1	110	45	—	70	50	70	11	20	8	60	80
AC60A-D	1	1/8	196.2	234.1	155	—	98.1	110	45	—	70	50	70	11	20	8	60	80

Model	Optional specifications									Semi-standard specifications					
	Square embedded type pressure gauge		Digital pressure switch		Round type pressure gauge		Round type pressure gauge (with color zone)		With auto drain	PC/PA bowl		Metal bowl		Metal bowl with level gauge	
										With barb fitting	With drain guide	With drain cock	With drain guide	With drain cock	With drain guide
	H	J	H	J	H	J	H	J	B	B	B	B	B	B	B
AC20A-D	□28	27	□27.8	37.5	ø37.5	57.5	ø37.5	58.5	104.9	—	91.4	87.4	93.9	—	—
AC30A-D	□28	32.5	□27.8	43	ø37.5	63	ø37.5	64	157.1	123.9	122.2	117.8	122.3	137.8	142.3
AC40A-D	□28	41.5	□27.8	52	ø42.5	73	ø42.5	73	186.9	155.6	153.9	149.5	154	169.5	174
AC40A-06-D	□28	41.5	□27.8	52	ø42.5	73	ø42.5	73	188.9	157.6	155.9	151.5	156	171.5	176
AC50A-D	□28	51	□27.8	61.5	ø42.5	82.5	ø42.5	82.5	273.9	242.6	240.9	236.5	241	256.5	261
AC60A-D	□28	51	□27.8	61.5	ø42.5	82.5	ø42.5	82.5	273.9	242.6	240.9	236.5	241	256.5	261

Dimensions: With Pressure Relief 3-Port Valve (V)

AC20A-V-D

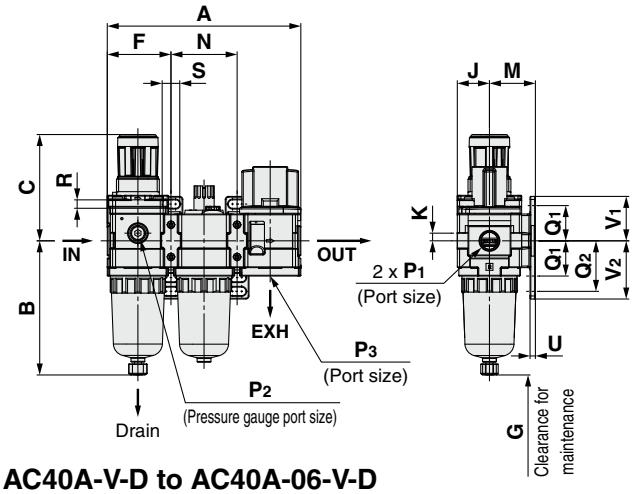

AC30A-V-D

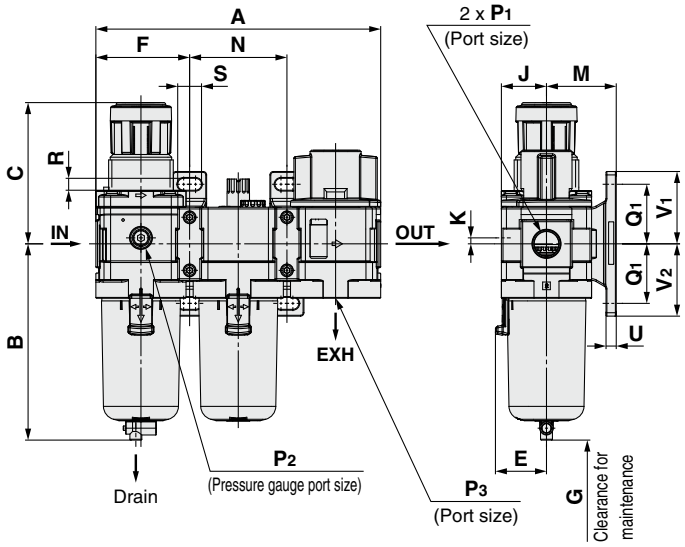

AC40A-V-D to AC40A-06-V-D

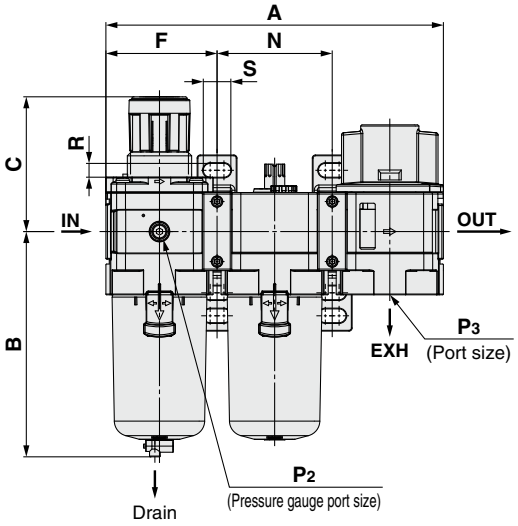

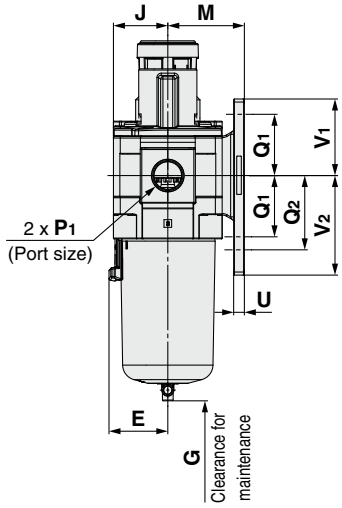

AC50A-V-D

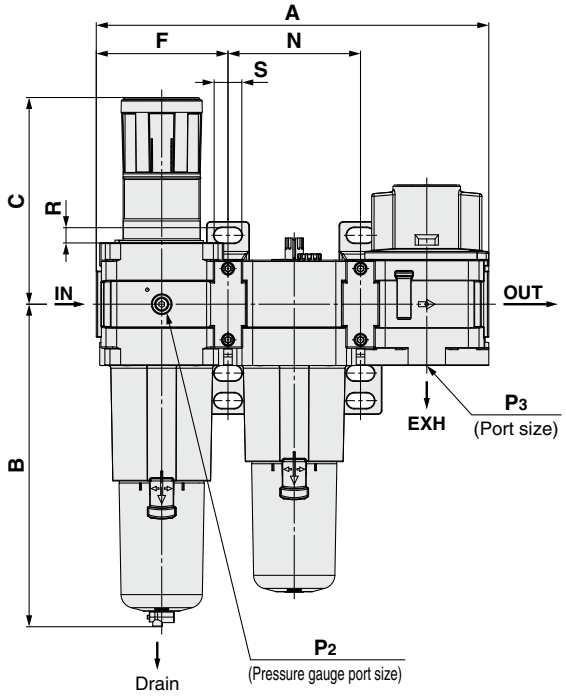

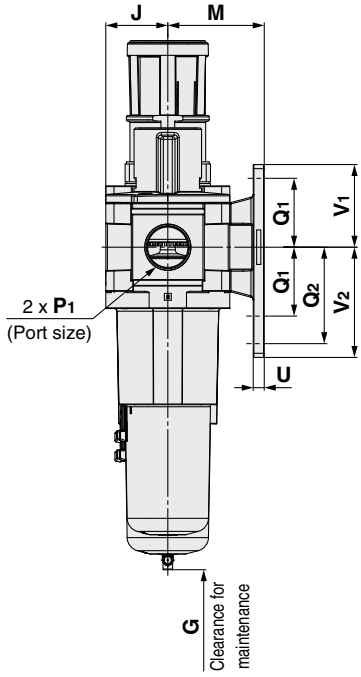

Applicable model	Optional specifications			
	Square embedded type pressure gauge	Digital pressure switch	Round type pressure gauge	Round type pressure gauge (with color zone)
AC20A-V-D to AC50A-V-D	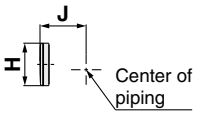	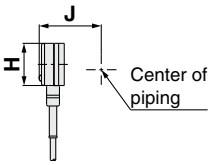	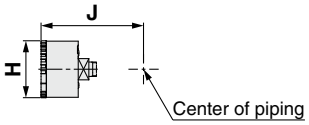	

Applicable model	Optional specifications	Semi-standard					
	With auto drain	PC/PA bowl		Metal bowl		Metal bowl with level gauge	
		Drain cock with barb fitting	With drain guide	With drain cock	With drain guide	With drain cock	With drain guide
AC20A-V-D	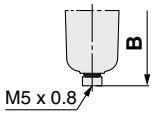		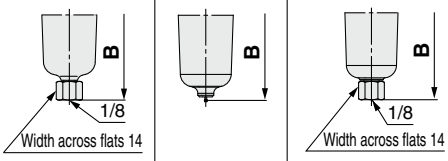				
AC30A-V-D to AC50A-V-D	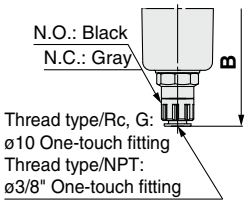	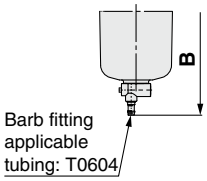	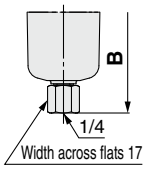	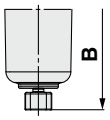	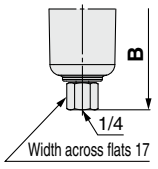	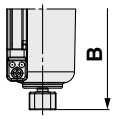	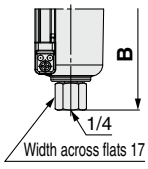

Model	Standard specifications																			
												Bracket mount								
	P_1	P_2	P_3	A	B	C	E	F	G	J	K	M	N	Q_1	Q_2	R	S	U	V_1	V_2
AC20A-V-D	1/8, 1/4	1/8	1/8	126.4	87.6	71.8	—	41.6	60	21	5	30	43.2	24	33	5.5	11.5	3.5	29	38
AC30A-V-D	1/4, 3/8	1/8	1/4	167.4	115.4	86.5	30	55.1	80	26.5	3.5	41	57.2	35	—	7	14	6	42.5	42.5
AC40A-V-D	1/4, 3/8, 1/2	1/8	3/8	220.4	147.1	91.5	38.4	72.6	110	35.5	—	50	75.2	40	55	9	18	7	50	65
AC40A-06-V-D	3/4	1/8	1/2	235.4	149.1	93	38.4	77.6	110	35.5	—	50	80.2	40	55	9	18	7	50	65
AC50A-V-D	3/4, 1	1/8	1/2	287.4	234.1	155	—	98.1	110	45	—	70	96.2	50	70	11	20	8	60	80

Model	Optional specifications									Semi-standard specifications					
	Square embedded type pressure gauge		Digital pressure switch		Round type pressure gauge		Round type pressure gauge (with color zone)		With auto drain	PC/PA bowl		Metal bowl		Metal bowl with level gauge	
										With barb fitting	With drain guide	With drain cock	With drain guide	With drain cock	With drain guide
	H	J	H	J	H	J	H	J	B	B	B	B	B	B	B
AC20A-V-D	□28	27	□27.8	37.5	ø37.5	57.5	ø37.5	58.5	104.9	—	91.4	87.4	93.9	—	—
AC30A-V-D	□28	32.5	□27.8	43	ø37.5	63	ø37.5	64	157.1	123.9	122.2	117.8	122.3	137.8	142.3
AC40A-V-D	□28	41.5	□27.8	52	ø42.5	73	ø42.5	73	186.9	155.6	153.9	149.5	154	169.5	174
AC40A-06-V-D	□28	41.5	□27.8	52	ø42.5	73	ø42.5	73	188.9	157.6	155.9	151.5	156	171.5	176
AC50A-V-D	□28	51	□27.8	61.5	ø42.5	82.5	ø42.5	82.5	273.9	242.6	240.9	236.5	241	256.5	261

Air Combination

Air Filter + Regulator

AC20B-D to AC60B-D

Symbol

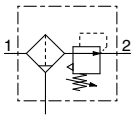

How to Order

AC 30 B – ☐ 03 DE – ☐ – ☐ – D

❶ ❷ ❸ ❹ ❺ ❻

Option and Semi-standard Symbol Selection

- Select one each for **a** to **i**.
- When more than one specification is required, indicate in alphanumeric order.

Example) AC30B-F03DE1-16NR-D

			Symbol	Description	❶ Body size 20	30	40	50	60
❷	Pipe thread type		Nil	Rc	●	●	●	●	●
			N*1	NPT	●	●	●	●	●
			F*2	G	●	●	●	●	●
			+						
❸	Port size		01	1/8	●	—	—	—	—
			02	1/4	●	●	●	—	—
			03	3/8	—	●	●	—	—
			04	1/2	—	—	●	—	—
			06	3/4	—	—	●	●	—
			10	1	—	—	—	●	●
			+						
❹	Option*3	a Float type auto drain	Nil	Without auto drain	●	●	●	●	●
			C*4	N.C. (Normally closed) Drain port is closed when pressure is not applied.	●	●	●	●	●
			D*5	N.O. (Normally open) Drain port is open when pressure is not applied.	—	●	●	●	●
			+						
		b Pressure gauge*6, *7	Nil	Without pressure gauge	●	●	●	●	●
			E	Square embedded type pressure gauge (with limit indicator)	●	●	●	●	●
			G	Round type pressure gauge (with limit indicator)	●	●	●	●	●
			M	Round type pressure gauge (with color zone)	●	●	●	●	●
		b Digital pressure switch	E1	Output: NPN output, Electrical entry: Wiring bottom entry	●	●	●	●	●
			E2	Output: NPN output, Electrical entry: Wiring top entry	●	●	●	●	●
			E3	Output: PNP output, Electrical entry: Wiring bottom entry	●	●	●	●	●
			E4	Output: PNP output, Electrical entry: Wiring top entry	●	●	●	●	●
			+						
❺	Attachment	c Pressure relief 3-port valve	Nil	Without attachment	●	●	●	●	●
			V	Mounting position: AF + AR + **VHS**	●	●	●	●	—
			V1*8	Mounting position: **VHS** + AF + AR☐K	●	●	●	●	—
			+						
❻	Semi-standard	d Set pressure*9	Nil	0.05 to 0.85 MPa setting	●	●	●	●	●
			1	0.02 to 0.2 MPa setting	●	●	●	●	●
			+						
		e Bowl*10	Nil	Polycarbonate bowl	●	●	●	●	●
			2	Metal bowl	●	●	●	●	●
			6	Nylon bowl	●	●	●	●	●
			8	Metal bowl with level gauge	—	●	●	●	●
			C	With bowl guard	●	—*11	—*11	—*11	—*11
			6C	With bowl guard (Nylon bowl)	●	—*12	—*12	—*12	—*12
			+						
		f Air filter drain port*13	Nil	With drain cock	●	●	●	●	●
			J*14	Drain guide 1/8	●	—	—	—	—
				Drain guide 1/4	—	●	●	●	●
			W*15	Drain cock with barb fitting (for ø6 x ø4 nylon tube)	—	●	●	●	●
			+						
		g Exhaust mechanism	Nil	Relieving type	●	●	●	●	●
			N	Non-relieving type	●	●	●	●	●

AC30B-D

			Symbol	Description	❶ Body size 20	30	40	50	60
❻ Semi-standard	h	Flow direction	Nil	Flow direction: Left to right	●	●	●	●	●
			R	Flow direction: Right to left	●	●	●	●	●
			+						
	i	Unit	Nil	Unit on product label: MPa, °C, Pressure gauge in SI units: MPa	●	●	●	●	●
			Z*16	Unit on product label: psi, °F, Pressure gauge: MPa/psi dual scale	○*18	○*18	○*18	○*18	○*18
			ZA*17	Digital pressure switch: With unit selection function	△*19	△*19	△*19	△*19	△*19

*1 Drain guide is NPT1/8 (applicable to the AC20B-D) and NPT1/4 (applicable to the AC30B-D to AC60B-D). The auto drain port comes with a ø3/8" One-touch fitting (applicable to the AC30B-D to AC60B-D).
*2 Drain guide is G1/8 (applicable to the AC20B-D) and G1/4 (applicable to the AC30B-D to AC60B-D).
*3 Options G and M are not assembled and supplied loose at the time of shipment.
*4 When pressure is not applied, condensate which does not start the auto drain mechanism will be left in the bowl. Releasing the residual condensate before ending operations for the day is recommended.
*5 If the compressor is small (0.75 kW, discharge flow is less than 100 L/min (ANR)), air leakage from the drain cock may occur during the start of operations. N.C. type is recommended.
*6 When the pressure gauge is attached, a 1.0 MPa pressure gauge will be fitted for standard (0.85 MPa) type. 0.4 MPa pressure gauge for 0.2 MPa type.
*7 When no pressure gauge or pressure gauge "G" or "M" is selected, it is not possible to change to an "E," "E1," "E2," "E3," or "E4" later.
*8 When attachment "V1" is selected, the regulator will be the type with a backflow function. Therefore, even if no pressure gauge or pressure gauge "G" or "M" is selected, it is possible to change the pressure gauge later. Additionally, when performing maintenance work, make sure that the outlet pressure is released to atmospheric pressure using a pressure gauge.
*9 Pressure can be set higher than the specification pressure in some cases, but use pressure within the specification range.
*10 Refer to chemical data on page 83 for chemical resistance of the bowl.
*11 A bowl guard is provided as standard equipment (polycarbonate).
*12 A bowl guard is provided as standard equipment (nylon).
*13 The combination of float type auto drain C and D is not available.
*14 Without a valve function
*15 The combination of metal bowl 2 and 8 is not available.
*16 For the pipe thread type: NPT
This product is for overseas use only according to the New Measurement Act. (The SI unit type is provided for use in Japan.)
Cannot be used with M: Round type pressure gauge (with color zone). Available by request for special.
The digital pressure switch will be equipped with the unit selection function, setting to psi initially.
*17 For options: E1, E2, E3, E4
This product is for overseas use only according to the New Measurement Act. (The SI unit is provided for use in Japan.)
*18 ○: For the pipe thread type: NPT only
*19 △: Select with options: E1, E2, E3, E4.

Standard Specifications

Model			AC20B-D	AC30B-D	AC40B-D	AC40B-06-D	AC50B-D	AC60B-D
Component	Air Filter	[AF]	AF20-D	AF30-D	AF40-D	AF40-06-D	AF50-D	AF60-D
	Regulator	[AR]	AR20-D	AR30-D	AR40-D	AR40-06-D	AR50-D	AR60-D
Port size			1/8, 1/4	1/4, 3/8	1/4, 3/8, 1/2	3/4	3/4, 1	1
Pressure gauge port size*1		[AR]	1/8					
Fluid			Air					
Ambient and fluid temperatures*2			–5 to 60°C (No freezing)					
Proof pressure			1.5 MPa					
Max. operating pressure			1.0 MPa					
Auto drain minimum operating pressure	N.C.	[AF]	0.1 MPa	0.15 MPa				
	N.O.	[AF]	—	0.1 MPa				
Set pressure range		[AR]	0.05 to 0.85 MPa					
Nominal filtration rating*3		[AF]	5 μm					
Compressed air purity class*4			ISO 8573-1:2010 [6 : 4 : 4]*5					
Drain capacity		[AF]	8 cm^3	25 cm^3	45 cm^3			
Bowl material		[AF]	Polycarbonate					
Bowl guard		[AF]	Semi-standard (Steel)	Standard (Polycarbonate)				
Construction		[AR]	Relieving type					
Weight			0.25 kg	0.51 kg	0.95 kg	1.02 kg	2.20 kg	2.39 kg

*1 Pressure gauge connection threads are not available for F.R.L. unit with a square embedded type pressure gauge or with a digital pressure switch.
*2 –5 to 50°C for the products with the digital pressure switch
*3 For the following conditions in accordance with [Test condition: ISO 8573-4:2001 compliant, Test method ISO 12500-3:2009 compliant]
Conditions: When a new element is used, and the flow capacity, inlet pressure, and the amount of solid bodies on the filter inlet side are stable
*4 The compressed air purity class is indicated based on ISO 8573-1:2010 Compressed air – Part 1: Contaminants and purity classes.
For details on this standard, refer to page 131.
*5 The compressed air quality class on the inlet side is [7 : 4 : 4].

Dimensions

AC20B-D

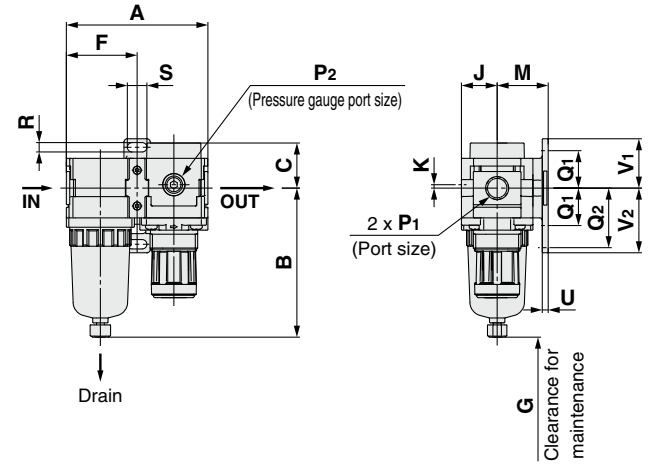

AC30B-D

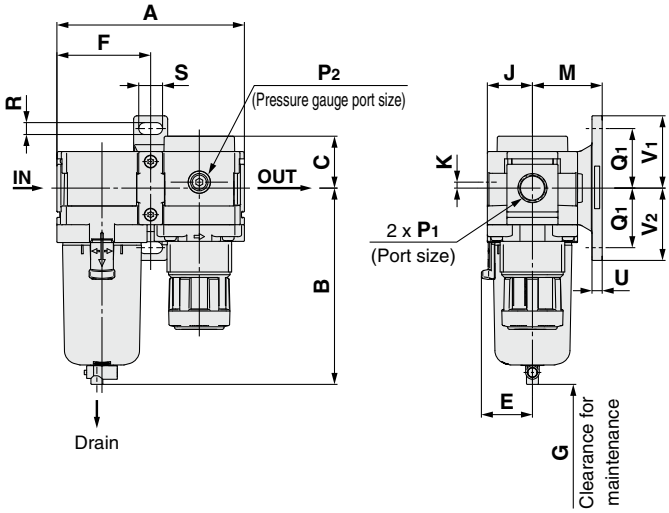

AC40B-D to AC40B-06-D

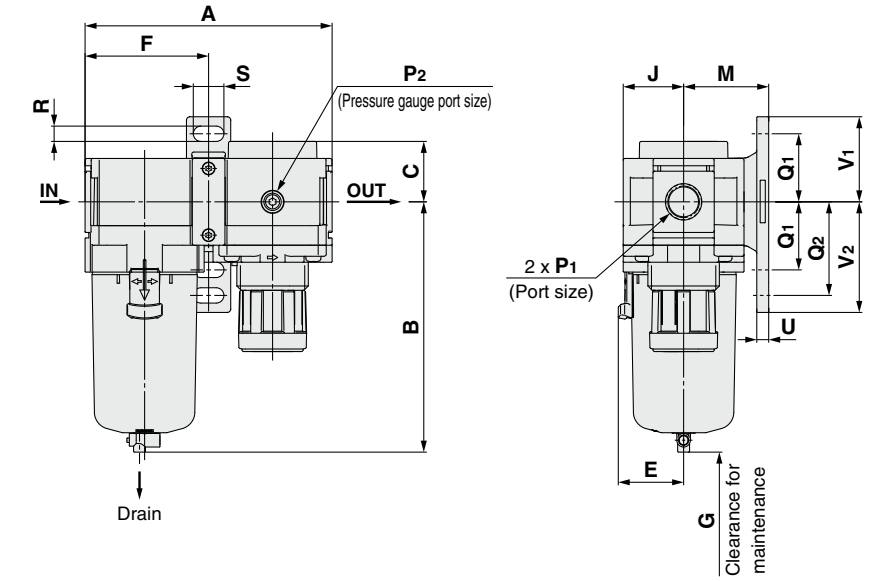

AC50B-D to AC60B-D

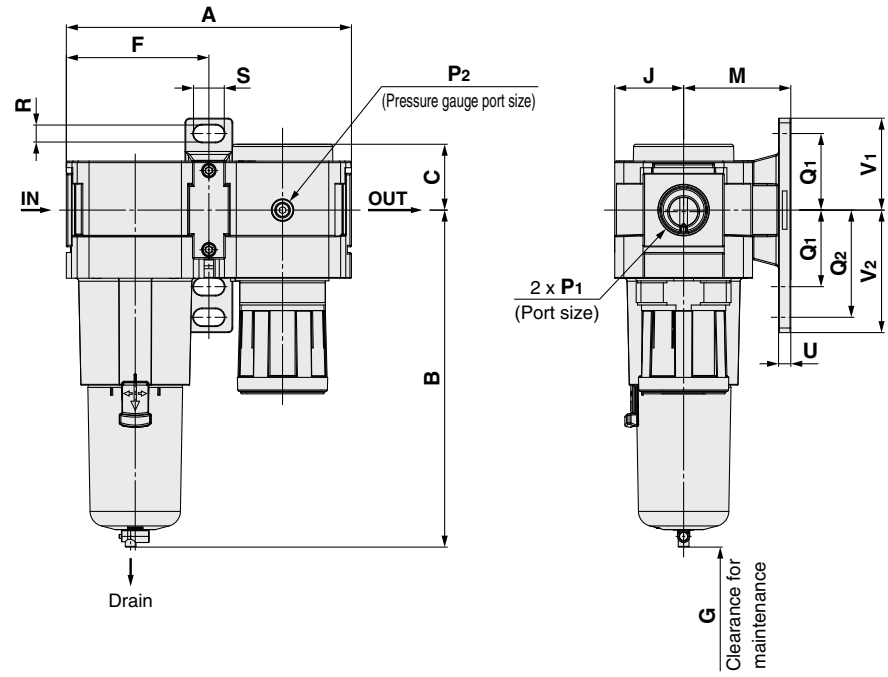

Applicable model	Optional specifications			
	Square embedded type pressure gauge	Digital pressure switch	Round type pressure gauge	Round type pressure gauge (with color zone)
AC20B-D to AC60B-D	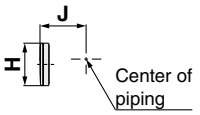	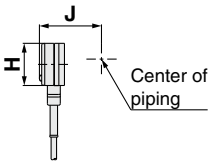	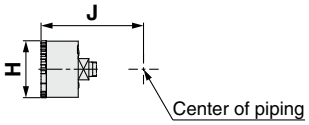	

Applicable model	Optional specifications	Semi-standard					
	With auto drain	PC/PA bowl		Metal bowl		Metal bowl with level gauge	
		Drain cock with barb fitting	With drain guide	With drain cock	With drain guide	With drain cock	With drain guide
AC20B-D	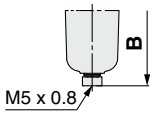		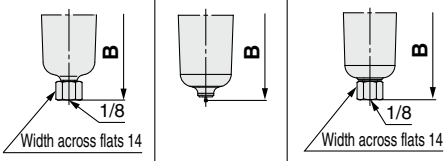				
AC30B-D to AC60B-D	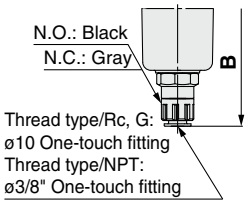	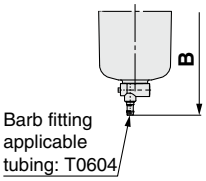	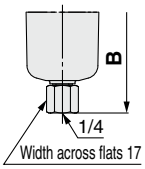	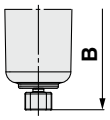	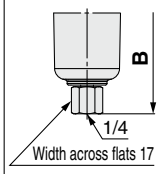	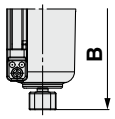	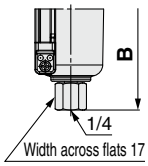

Model	Standard specifications																	
											Bracket mount							
	P_1	P_2	A	B	C	E	F	G	J	K	M	Q_1	Q_2	R	S	U	V_1	V_2
AC20B-D	1/8, 1/4	1/8	83.2	87.6	26.5	—	41.6	25	21	2	30	24	33	5.5	11.5	3.5	29	38
AC30B-D	1/4, 3/8	1/8	110.2	115.4	30.5	30	55.1	35	26.5	3.5	41	35	—	7	14	6	42.5	42.5
AC40B-D	1/4, 3/8, 1/2	1/8	145.2	147.1	35.5	38.4	72.6	40	35.5	—	50	40	55	9	18	7	50	65
AC40B-06-D	3/4	1/8	155.2	149.1	35.5	38.4	77.6	40	35.5	—	50	40	55	9	18	7	50	65
AC50B-D	3/4, 1	1/8	186.2	220.1	43	—	93.1	30	45	—	70	50	70	11	20	8	60	80
AC60B-D	1	1/8	196.2	234.1	45	—	98.1	30	45	—	70	50	70	11	20	8	60	80

Model	Optional specifications									Semi-standard specifications					
	Square embedded type pressure gauge		Digital pressure switch		Round type pressure gauge		Round type pressure gauge (with color zone)		With auto drain	PC/PA bowl		Metal bowl		Metal bowl with level gauge	
										With barb fitting	With drain guide	With drain cock	With drain guide	With drain cock	With drain guide
	H	J	H	J	H	J	H	J	B	B	B	B	B	B	B
AC20B-D	□28	27	□27.8	37.5	ø37.5	57.5	ø37.5	58.5	104.9	—	91.4	87.4	93.9	—	—
AC30B-D	□28	32.5	□27.8	43	ø37.5	63	ø37.5	64	157.1	123.9	122.2	117.8	122.3	137.8	142.3
AC40B-D	□28	41.5	□27.8	52	ø42.5	73	ø42.5	73	186.9	155.6	153.9	149.5	154	169.5	174
AC40B-06-D	□28	41.5	□27.8	52	ø42.5	73	ø42.5	73	188.9	157.6	155.9	151.5	156	171.5	176
AC50B-D	□28	51	□27.8	61.5	ø42.5	82.5	ø42.5	82.5	259.9	228.6	226.9	222.5	227	242.5	247
AC60B-D	□28	51	□27.8	61.5	ø42.5	82.5	ø42.5	82.5	273.9	242.6	240.9	236.5	241	256.5	261

Dimensions: With Pressure Relief 3-Port Valve (V)

AC20B-V-D

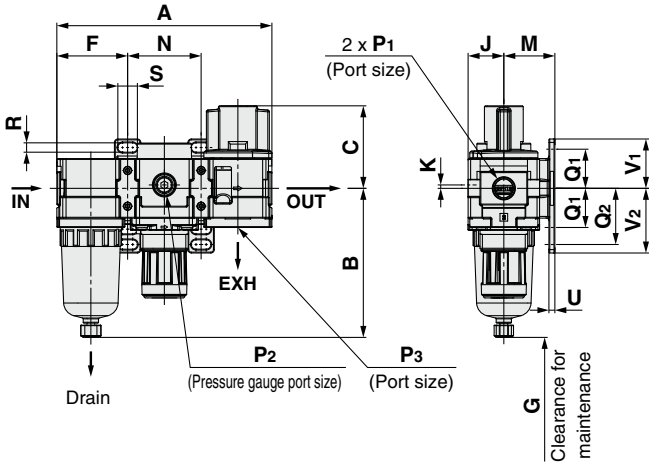

AC30B-V-D

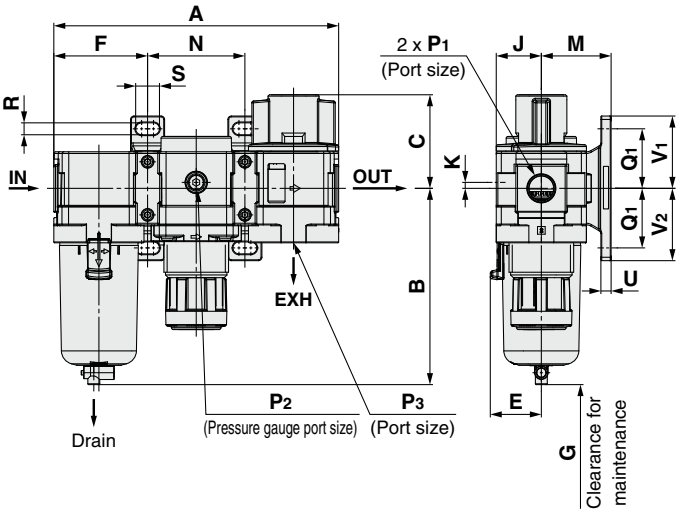

AC40B-V-D to AC40B-06-V-D

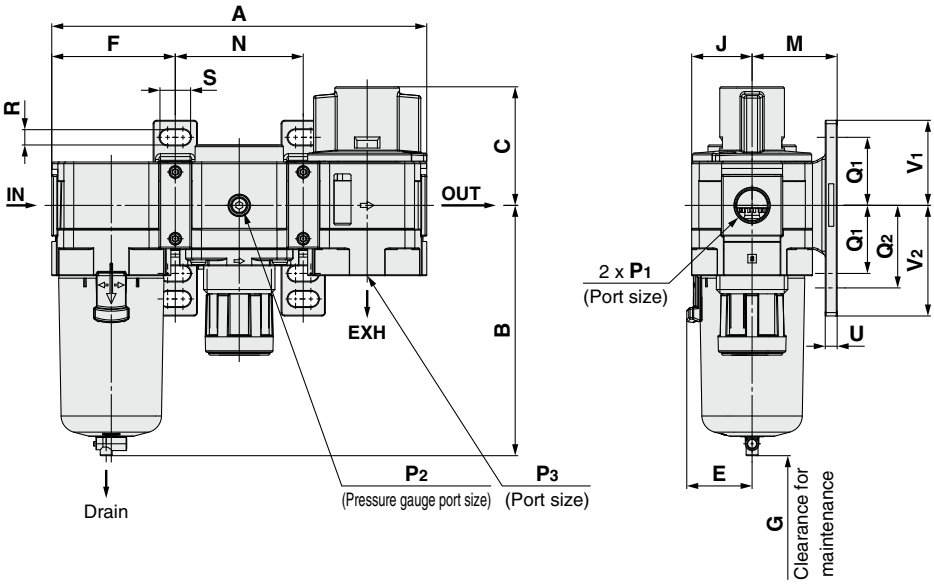

AC50B-V-D

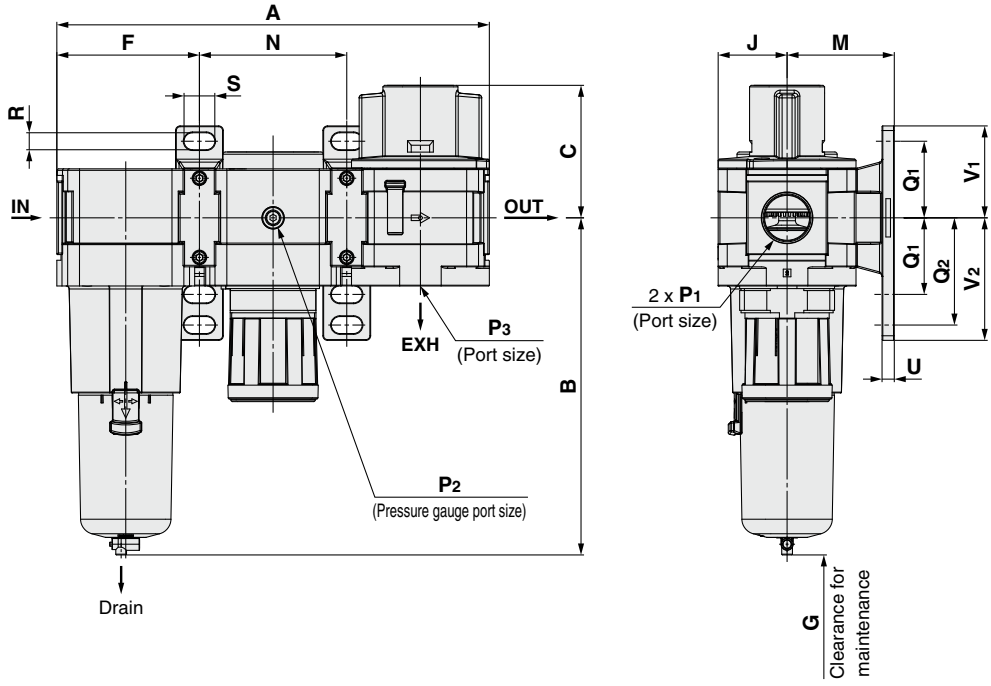

Applicable model	Optional specifications			
	Square embedded type pressure gauge	Digital pressure switch	Round type pressure gauge	Round type pressure gauge (with color zone)
AC20B-V-D to AC50B-V-D	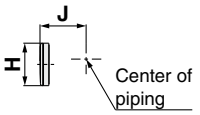	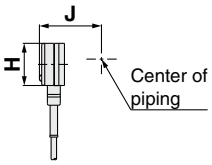	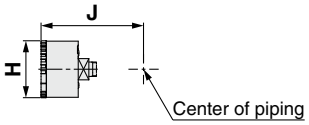	

Applicable model	Optional specifications	Semi-standard					
	With auto drain	PC/PA bowl		Metal bowl		Metal bowl with level gauge	
		Drain cock with barb fitting	With drain guide	With drain cock	With drain guide	With drain cock	With drain guide
AC20B-V-D	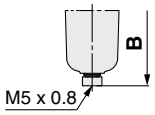		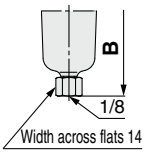	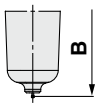	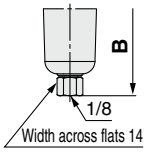		
AC30B-V-D to AC50B-V-D	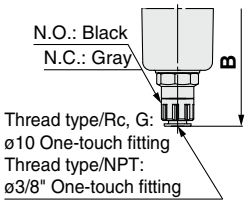	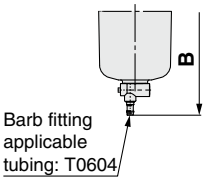	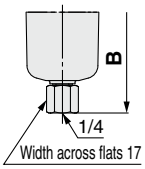	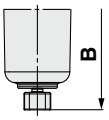	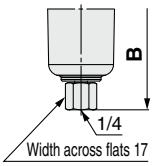	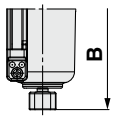	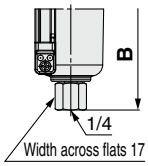

Model	Standard specifications																			
												Bracket mount								
	P_1	P_2	P_3	A	B	C	E	F	G	J	K	M	N	Q_1	Q_2	R	S	U	V_1	V_2
AC20B-V-D	1/8, 1/4	1/8	1/8	126.4	87.6	48.5	—	41.6	25	21	2	30	43.2	24	33	5.5	11.5	3.5	29	38
AC30B-V-D	1/4, 3/8	1/8	1/4	167.4	115.4	55	30	55.1	35	26.5	3.5	41	57.2	35	—	7	14	6	42.5	42.5
AC40B-V-D	1/4, 3/8, 1/2	1/8	3/8	220.4	147.1	69.7	38.4	72.6	40	35.5	—	50	75.2	40	55	9	18	7	50	65
AC40B-06-V-D	3/4	1/8	1/2	235.4	149.1	71.7	38.4	77.6	40	35.5	—	50	80.2	40	55	9	18	7	50	65
AC50B-V-D	3/4, 1	1/8	1/2	282.4	220.1	86.5	—	93.1	30	45	—	70	96.2	50	70	11	20	8	60	80

Model	Optional specifications									Semi-standard specifications					
	Square embedded type pressure gauge		Digital pressure switch		Round type pressure gauge		Round type pressure gauge (with color zone)		With auto drain	PC/PA bowl		Metal bowl		Metal bowl with level gauge	
										With barb fitting	With drain guide	With drain cock	With drain guide	With drain cock	With drain guide
	H	J	H	J	H	J	H	J	B	B	B	B	B	B	B
AC20B-V-D	□28	27	□27.8	37.5	ø37.5	57.5	ø37.5	58.5	104.9	—	91.4	87.4	93.9	—	—
AC30B-V-D	□28	32.5	□27.8	43	ø37.5	63	ø37.5	64	157.1	123.9	122.2	117.8	122.3	137.8	142.3
AC40B-V-D	□28	41.5	□27.8	52	ø42.5	73	ø42.5	73	186.9	155.6	153.9	149.5	154	169.5	174
AC40B-06-V-D	□28	41.5	□27.8	52	ø42.5	73	ø42.5	73	188.9	157.6	155.9	151.5	156	171.5	176
AC50B-V-D	□28	51	□27.8	61.5	ø42.5	82.5	ø42.5	82.5	259.9	228.6	226.9	222.5	227	242.5	247

Dimensions: With Pressure Relief 3-Port Valve (V1)

AC20B-V1-D

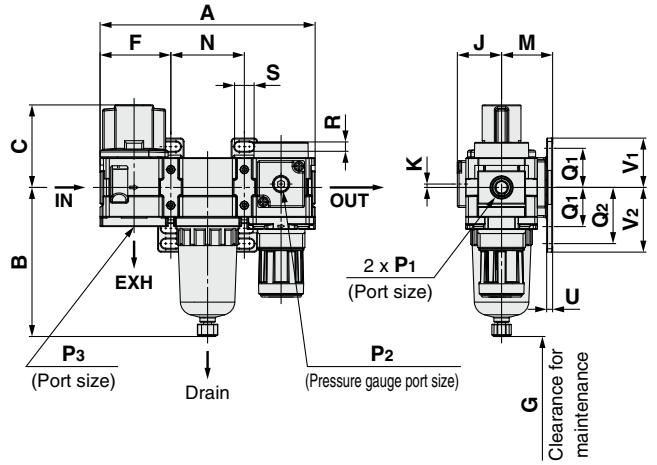

AC30B-V1-D

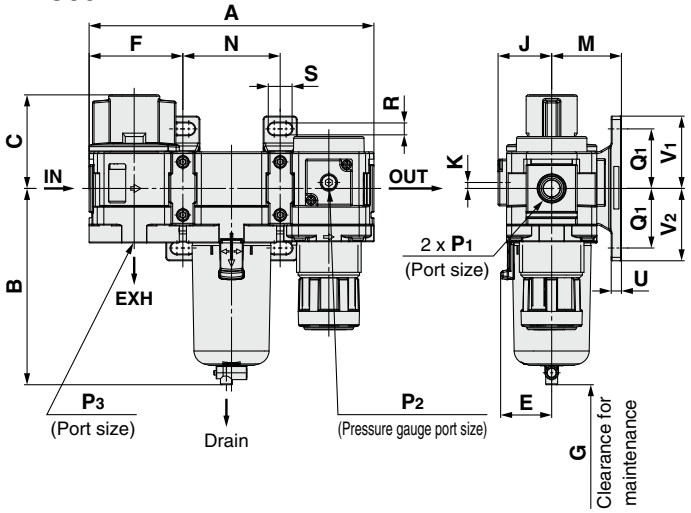

AC40B-V1-D to AC40B-06-V1-D

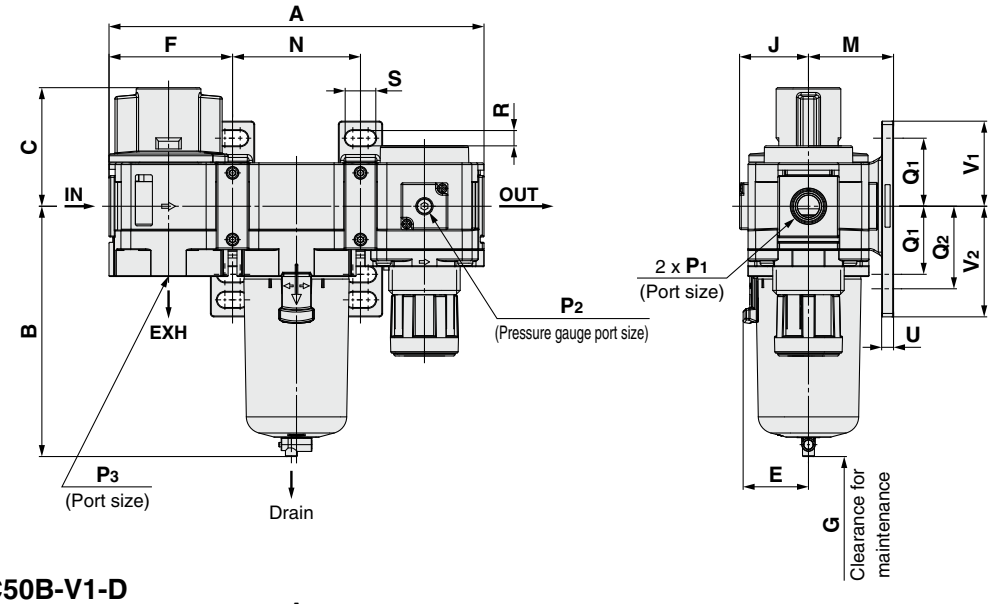

AC50B-V1-D

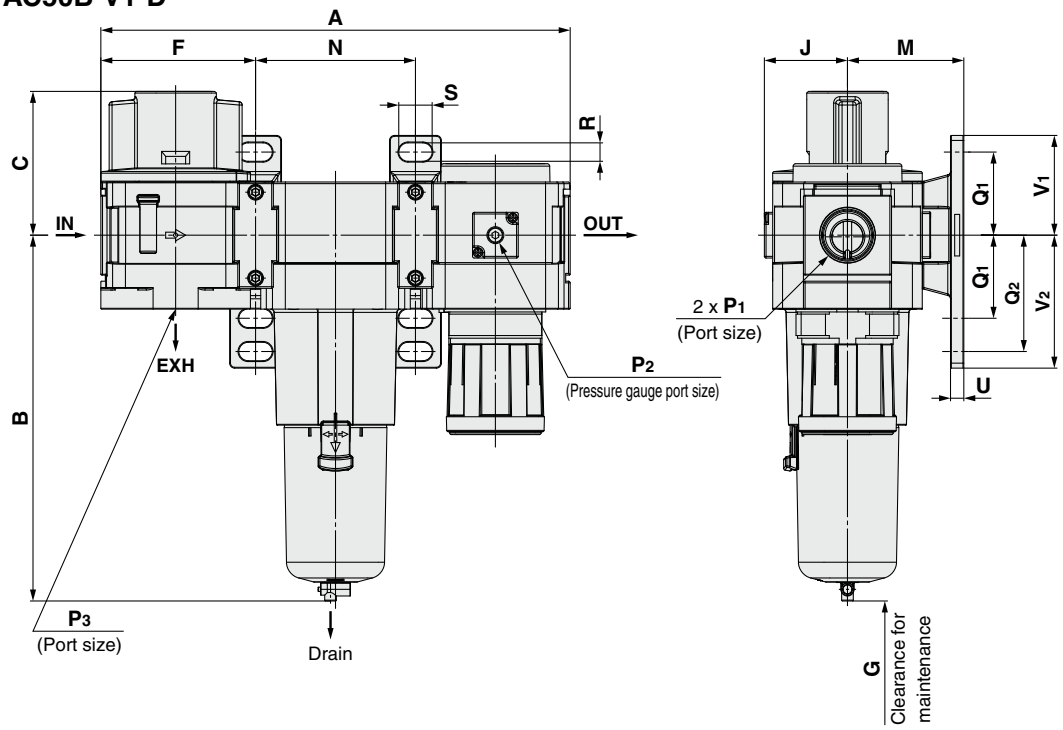

Applicable model	Optional specifications			
	Square embedded type pressure gauge	Digital pressure switch	Round type pressure gauge	Round type pressure gauge (with color zone)
AC20B-V1-D to AC50B-V1-D	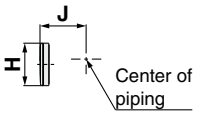	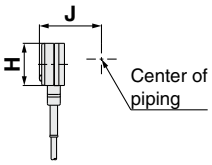	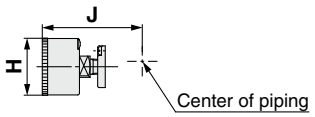	

Applicable model	Optional specifications	Semi-standard					
	With auto drain	PC/PA bowl		Metal bowl		Metal bowl with level gauge	
		Drain cock with barb fitting	With drain guide	With drain cock	With drain guide	With drain cock	With drain guide
AC20B-V1-D	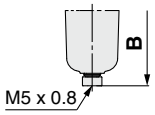		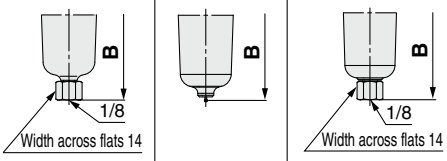				
AC30B-V1-D to AC50B-V1-D	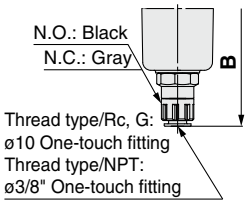	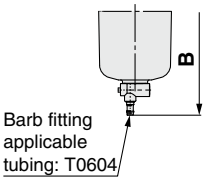	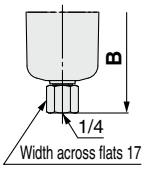	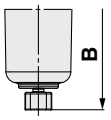	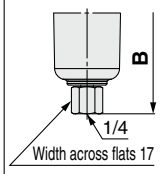	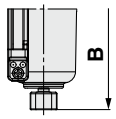	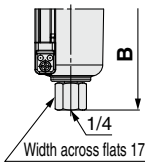

Model	Standard specifications																			
												Bracket mount								
	P_1	P_2	P_3	A	B	C	E	F	G	J	K	M	N	Q_1	Q_2	R	S	U	V_1	V_2
AC20B-V1-D	1/8, 1/4	1/8	1/8	126.4	87.6	48.5	—	41.6	25	26	2	30	43.2	24	33	5.5	11.5	3.5	29	38
AC30B-V1-D	1/4, 3/8	1/8	1/4	167.4	115.4	55	30	55.1	35	31.5	3.5	41	57.2	35	—	7	14	6	42.5	42.5
AC40B-V1-D	1/4, 3/8, 1/2	1/8	3/8	220.4	147.1	69.7	38.4	72.6	40	40.5	—	50	75.2	40	55	9	18	7	50	65
AC40B-06-V1-D	3/4	1/8	1/2	235.4	149.1	71.7	38.4	77.6	40	40.5	—	50	80.2	40	55	9	18	7	50	65
AC50B-V1-D	3/4, 1	1/8	1/2	282.4	220.1	86.5	—	93.1	30	50	—	70	96.2	50	70	11	20	8	60	80

Model	Optional specifications									Semi-standard specifications					
	Square embedded type pressure gauge		Digital pressure switch		Round type pressure gauge		Round type pressure gauge (with color zone)		With auto drain	PC/PA bowl		Metal bowl		Metal bowl with level gauge	
										With barb fitting	With drain guide	With drain cock	With drain guide	With drain cock	With drain guide
	H	J	H	J	H	J	H	J	B	B	B	B	B	B	B
AC20B-V1-D	□28	27	□27.8	37.5	ø37.5	62.5	ø37.5	63.5	104.9	—	91.4	87.4	93.9	—	—
AC30B-V1-D	□28	32.5	□27.8	43	ø37.5	68	ø37.5	69	157.1	123.9	122.2	117.8	122.3	137.8	142.3
AC40B-V1-D	□28	41.5	□27.8	52	ø42.5	78	ø42.5	78	186.9	155.6	153.9	149.5	154	169.5	174
AC40B-06-V1-D	□28	41.5	□27.8	52	ø42.5	73	ø42.5	73	188.9	157.6	155.9	151.5	156	171.5	176
AC50B-V1-D	□28	51	□27.8	61.5	ø42.5	82.5	ø42.5	82.5	259.9	228.6	226.9	222.5	227	242.5	247

Air Combination

Air Filter + Mist Separator + Regulator

AC20C-D to AC40C-D

Symbol

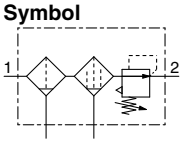

How to Order

AC 30 C – ☐ 03 DE – ☐ – ☐ – D

❶ ❷ ❸ ❹ ❺ ❻

Option and Semi-standard Symbol Selection

- Select one each for **a** to **i**.
- When more than one specification is required, indicate in alphanumeric order.

Example) AC30C-F03DE1-16NR-D

			Symbol	Description	❶ Body size 20	30	40
❷	Pipe thread type		**Nil**	Rc	●	●	●
			N[*1]	NPT	●	●	●
			F[*2]	G	●	●	●
			+				
❸	Port size		**01**	1/8	●	—	—
			02	1/4	●	●	●
			03	3/8	—	●	●
			04	1/2	—	—	●
			06	3/4	—	—	●
			+				
❹	Option[*3]	**a** Float type auto drain	**Nil**	Without auto drain	●	●	●
			C[*4]	N.C. (Normally closed) Drain port is closed when pressure is not applied.	●	●	●
			D[*5]	N.O. (Normally open) Drain port is open when pressure is not applied.	—	●	●
			+				
		b Pressure gauge[*6, *7]	**Nil**	Without pressure gauge	●	●	●
			E	Square embedded type pressure gauge (with limit indicator)	●	●	●
			G	Round type pressure gauge (with limit indicator)	●	●	●
			M	Round type pressure gauge (with color zone)	●	●	●
		b Digital pressure switch	**E1**	Output: NPN output, Electrical entry: Wiring bottom entry	●	●	●
			E2	Output: NPN output, Electrical entry: Wiring top entry	●	●	●
			E3	Output: PNP output, Electrical entry: Wiring bottom entry	●	●	●
			E4	Output: PNP output, Electrical entry: Wiring top entry	●	●	●
			+				
❺	Attachment	**c** Pressure relief 3-port valve	**Nil**	Without attachment	●	●	●
			V	Mounting position: AF + AFM + AR + **VHS**	●	●	●
			V1[*8]	Mounting position: **VHS** + AF + AFM + AR☐K	●	●	●
			+				
❻	Semi-standard	**d** Set pressure[*9]	**Nil**	0.05 to 0.85 MPa setting	●	●	●
			1	0.02 to 0.2 MPa setting	●	●	●
			+				
		e Bowl[*10]	**Nil**	Polycarbonate bowl	●	●	●
			2	Metal bowl	●	●	●
			6	Nylon bowl	●	●	●
			8	Metal bowl with level gauge	—	●	●
			C	With bowl guard	●	—[*11]	—[*11]
			6C	With bowl guard (Nylon bowl)	●	—[*12]	—[*12]
			+				
		f Air filter Mist separator drain port[*13]	**Nil**	With drain cock	●	●	●
			J[*14]	Drain guide 1/8	●	—	—
				Drain guide 1/4	—	●	●
			W[*15]	Drain cock with barb fitting (for ø6 x ø4 nylon tube)	—	●	●
			+				
		g Exhaust mechanism	**Nil**	Relieving type	●	●	●
			N	Non-relieving type	●	●	●

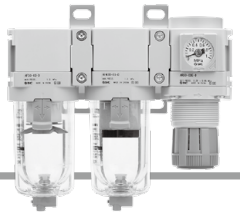

AC30C-D

			Symbol	Description	❶ Body size 20	30	40
❻ Semi-standard	h	Flow direction	Nil	Flow direction: Left to right	●	●	●
			R	Flow direction: Right to left	●	●	●
			+				
	i	Unit	Nil	Unit on product label: MPa, °C, Pressure gauge in SI units: MPa	●	●	●
			Z*16	Unit on product label: psi, °F, Pressure gauge: MPa/psi dual scale	○*18	○*18	○*18
			ZA*17	Digital pressure switch: With unit selection function	△*19	△*19	△*19

*1 Drain guide is NPT1/8 (applicable to the AC20C-D) and NPT1/4 (applicable to the AC30C-D to AC40C-D). The auto drain port comes with a ø3/8" One-touch fitting (applicable to the AC30C-D to AC40C-D).
*2 Drain guide is G1/8 (applicable to the AC20C-D) and G1/4 (applicable to the AC30C-D to AC40C-D).
*3 Options G and M are not assembled and supplied loose at the time of shipment.
*4 When pressure is not applied, condensate which does not start the auto drain mechanism will be left in the bowl. Releasing the residual condensate before ending operations for the day is recommended.
*5 If the compressor is small (0.75 kW, discharge flow is less than 100 L/min (ANR)), air leakage from the drain cock may occur during the start of operations. N.C. type is recommended.
*6 When the pressure gauge is attached, a 1.0 MPa pressure gauge will be fitted for standard (0.85 MPa) type. 0.4 MPa pressure gauge for 0.2 MPa type.
*7 When no pressure gauge or pressure gauge "G" or "M" is selected, it is not possible to change to an "E," "E1," "E2," "E3," or "E4" later.
*8 When attachment "V1" is selected, the regulator will be the type with a backflow function. Therefore, even if no pressure gauge or pressure gauge "G" or "M" is selected, it is possible to change the pressure gauge later. Additionally, when performing maintenance work, make sure that the outlet pressure is released to atmospheric pressure using a pressure gauge.
*9 Pressure can be set higher than the specification pressure in some cases, but use pressure within the specification range.
*10 Refer to chemical data on pages 83 and 91 for chemical resistance of the bowl.
*11 A bowl guard is provided as standard equipment (polycarbonate).
*12 A bowl guard is provided as standard equipment (nylon).
*13 The combination of float type auto drain C and D is not available.
*14 Without a valve function
*15 The combination of metal bowl 2 and 8 is not available.
*16 For the pipe thread type: NPT
This product is for overseas use only according to the New Measurement Act. (The SI unit type is provided for use in Japan.)
Cannot be used with M: Round type pressure gauge (with color zone). Available by request for special.
The digital pressure switch will be equipped with the unit selection function, setting to psi initially.
*17 For options: E1, E2, E3, E4
This product is for overseas use only according to the New Measurement Act. (The SI unit is provided for use in Japan.)
*18 ○: For the pipe thread type: NPT only
*19 △: Select with options: E1, E2, E3, E4.

Standard Specifications

Model			AC20C-D	AC30C-D	AC40C-D	AC40C-06-D
Component	Air Filter	[AF]	AF20-D	AF30-D	AF40-D	AF40-06-D
	Mist Separator	[AFM]	AFM20-D	AFM30-D	AFM40-D	AFM40-06-D
	Regulator	[AR]	AR20-D	AR30-D	AR40-D	AR40-06-D
Port size			1/8, 1/4	1/4, 3/8	1/4, 3/8, 1/2	3/4
Pressure gauge port size*1		[AR]	1/8			
Fluid			Air			
Ambient and fluid temperatures*2			–5 to 60°C (No freezing)			
Proof pressure			1.5 MPa			
Max. operating pressure			1.0 MPa			
Auto drain minimum operating pressure	N.C.	[AF/AFM]	0.1 MPa	0.15 MPa		
	N.O.	[AF/AFM]	—	0.1 MPa		
Set pressure range		[AR]	0.05 to 0.85 MPa			
Max. flow capacity*3		[AFM]	200 L/min (ANR)	450 L/min (ANR)	1100 L/min (ANR)	
Nominal filtration rating*4		[AF]	5 μm			
		[AFM]	0.3 μm (99.9% filtered particle size)			
Outlet side oil mist concentration*5, *6		[AFM]	Max. 1.0 mg/m^3 (≈ 0.8 ppm)			
Compressed air purity class*7			ISO 8573-1:2010 [3 : 4 : 3]*8			
Drain capacity		[AF/AFM]	8 cm^3	25 cm^3	45 cm^3	
Bowl material		[AF/AFM]	Polycarbonate			
Bowl guard		[AF/AFM]	Semi-standard (Steel)	Standard (Polycarbonate)		
Construction		[AR]	Relieving type			
Weight			0.38 kg	0.75 kg	1.42 kg	1.54 kg

*1 Pressure gauge connection threads are not available for F.R.L. unit with a square embedded type pressure gauge or with a digital pressure switch.
*2 –5 to 50°C for the products with the digital pressure switch
*3 Mist separator inlet pressure: 0.7 MPa. Flow at 20°C, atmospheric pressure, and 65% of the relative humidity
The maximum flow capacity varies depending on the inlet pressure.
Keep the air flow within the maximum flow capacity to prevent an outflow of lubricant to the outlet side.
*4 For the following conditions in accordance with [Test condition: ISO 8573-4:2001, Test method ISO 12500-3:2009 compliant] in addition to the conditions above
Conditions: When a new element is used, and the flow capacity, inlet pressure, and the amount of solid bodies on the filter inlet side are stable
*5 The outlet side oil mist concentration for the following conditions in accordance with [Test condition: ISO 8573-2:2007, Test method ISO 12500-1:2007 compliant] in addition to the conditions above
Conditions: When a new element is used, the oil mist concentration on the filter inlet side is 10 mg/m^3, and the flow capacity, inlet pressure, and the oil mist concentration on the filter inlet side are stable
*6 The bowl seal and other O-rings are slightly lubricated.
*7 The compressed air purity class is indicated based on ISO 8573-1:2010 Compressed air – Part 1: Contaminants and purity classes.
For details on this standard, refer to page 131.
*8 The compressed air quality class on the inlet side is [7 : 4 : 4].

Dimensions

AC20C-D

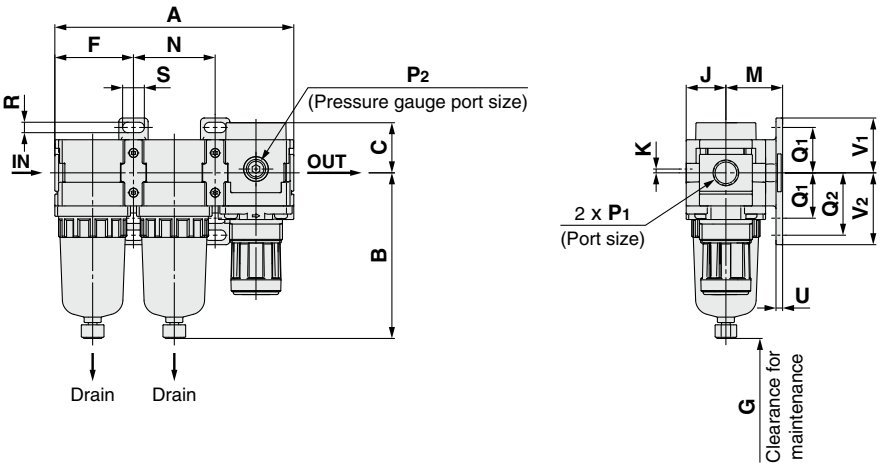

AC30C-D

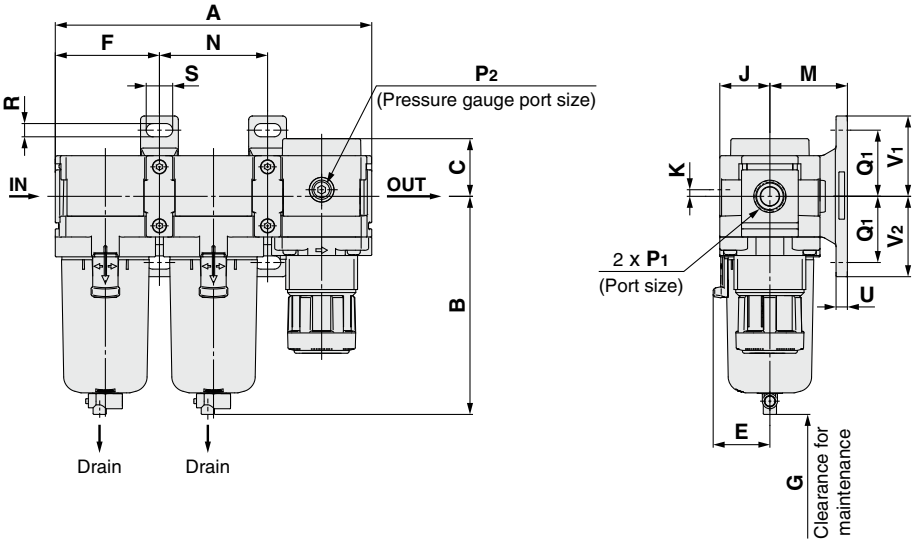

AC40C-D to AC40C-06-D

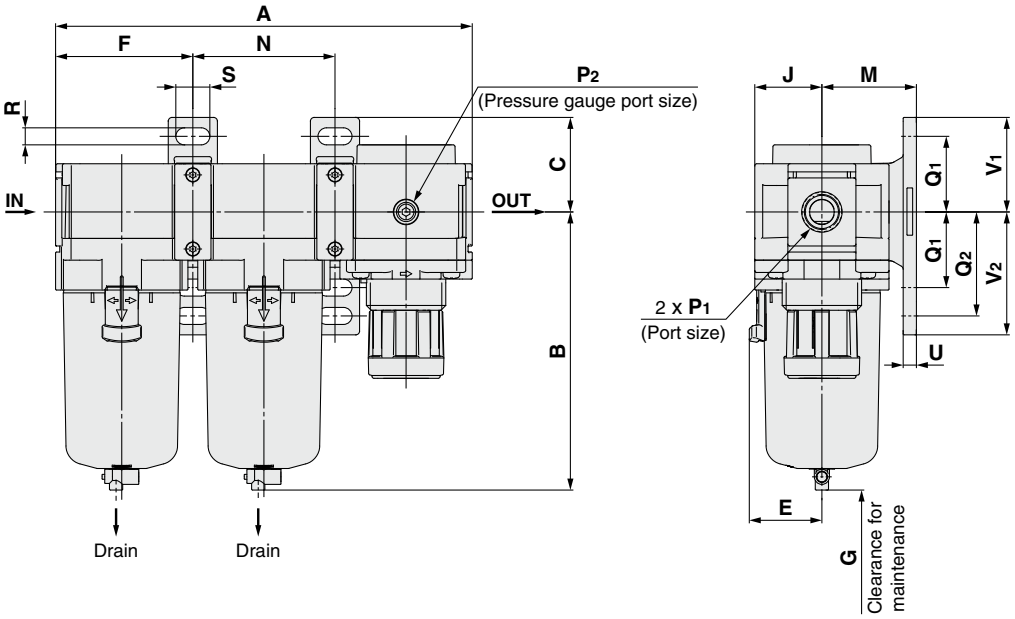

Applicable model	Optional specifications			
	Square embedded type pressure gauge	Digital pressure switch	Round type pressure gauge	Round type pressure gauge (with color zone)
AC20C-D to AC40C-06-D	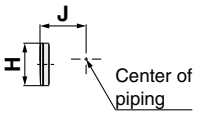	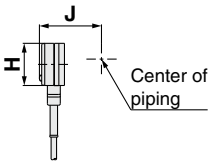	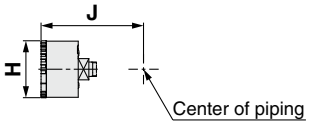	

Applicable model	Optional specifications	Semi-standard					
	With auto drain	PC/PA bowl		Metal bowl		Metal bowl with level gauge	
		Drain cock with barb fitting	With drain guide	With drain cock	With drain guide	With drain cock	With drain guide
AC20C-D	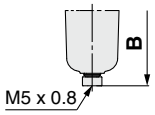		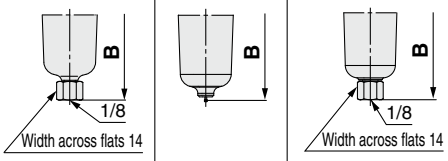				
AC30C-D to AC40C-06-D	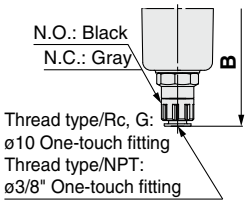	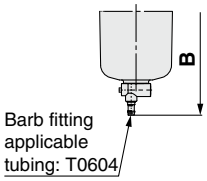	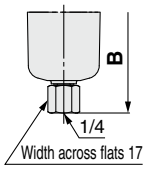	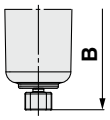	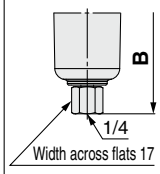	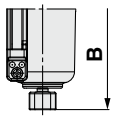	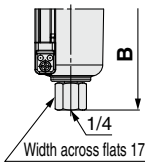

Model	Standard specifications																		
											Bracket mount								
	P_1	P_2	A	B	C	E	F	G	J	K	M	N	Q_1	Q_2	R	S	U	V_1	V_2
AC20C-D	1/8, 1/4	1/8	126.4	87.6	26.5	—	41.6	45	21	2	30	43.2	24	33	5.5	11.5	3.5	29	38
AC30C-D	1/4, 3/8	1/8	167.4	115.4	30.5	30	55.1	50	26.5	3.5	41	57.2	35	—	7	14	6	42.5	42.5
AC40C-D	1/4, 3/8, 1/2	1/8	220.4	147.1	35.5	38.4	72.6	75	35.5	—	50	75.2	40	55	9	18	7	50	65
AC40C-06-D	3/4	1/8	235.4	149.1	35.5	38.4	77.6	75	35.5	—	50	80.2	40	55	9	18	7	50	65

Model	Optional specifications									Semi-standard specifications					
	Square embedded type pressure gauge		Digital pressure switch		Round type pressure gauge		Round type pressure gauge (with color zone)		With auto drain	PC/PA bowl		Metal bowl		Metal bowl with level gauge	
										With barb fitting	With drain guide	With drain cock	With drain guide	With drain cock	With drain guide
	H	J	H	J	H	J	H	J	B	B	B	B	B	B	B
AC20C-D	□28	27	□27.8	37.5	ø37.5	57.5	ø37.5	58.5	104.9	—	91.4	87.4	93.9	—	—
AC30C-D	□28	32.5	□27.8	43	ø37.5	63	ø37.5	64	157.1	123.9	122.2	117.8	122.3	137.8	142.3
AC40C-D	□28	41.5	□27.8	52	ø42.5	73	ø42.5	73	186.9	155.6	153.9	149.5	154	169.5	174
AC40C-06-D	□28	41.5	□27.8	52	ø42.5	73	ø42.5	73	188.9	157.6	155.9	151.5	156	171.5	176

Dimensions: With Pressure Relief 3-Port Valve (V)

AC20C-V-D

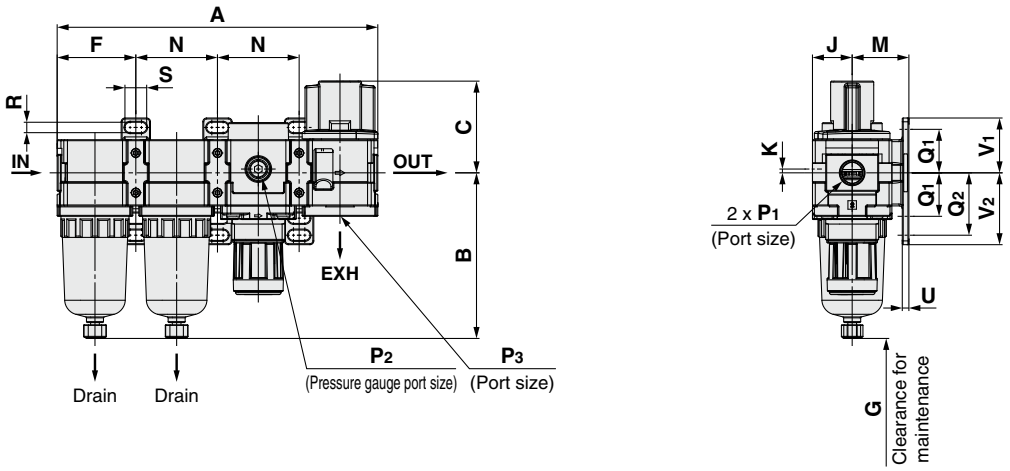

AC30C-V-D

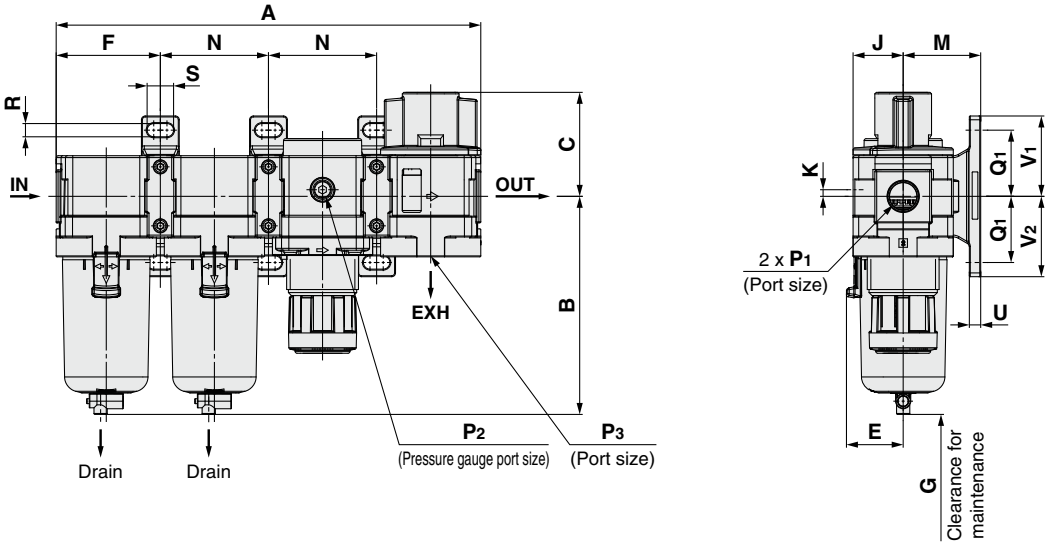

AC40C-V-D to AC40C-06-V-D

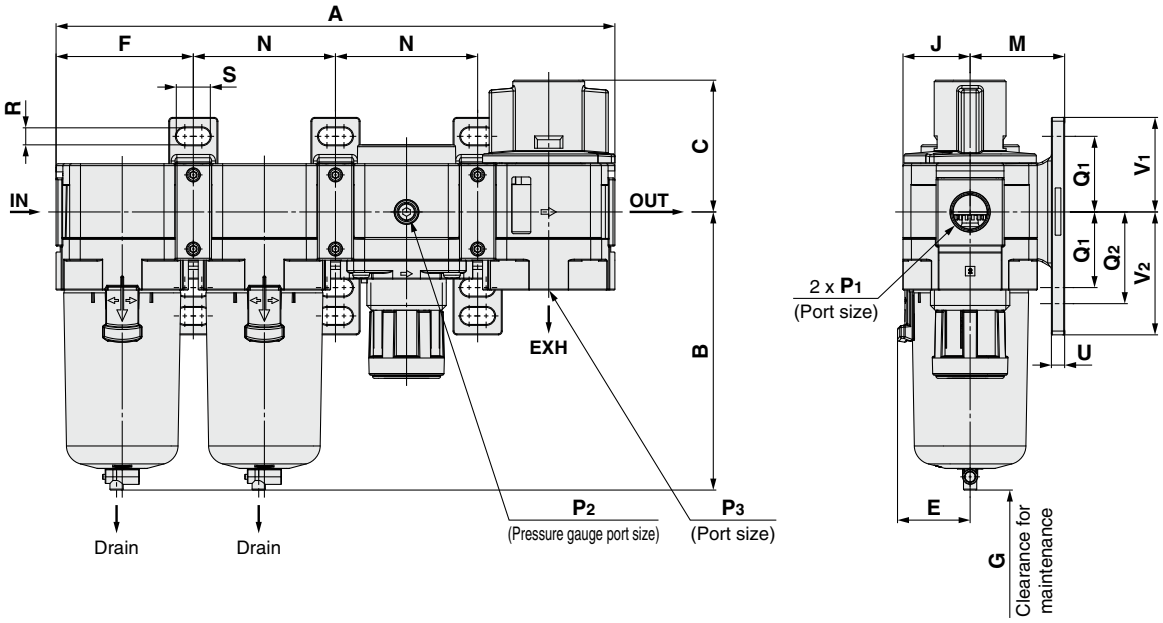

Applicable model	Optional specifications			
	Square embedded type pressure gauge	Digital pressure switch	Round type pressure gauge	Round type pressure gauge (with color zone)
AC20C-V-D to AC40C-06-V-D	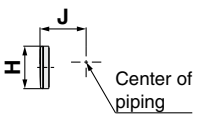	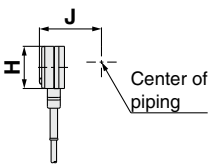	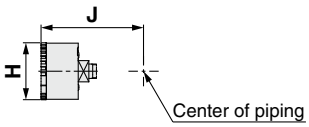	

Applicable model	Optional specifications	Semi-standard					
	With auto drain	PC/PA bowl		Metal bowl		Metal bowl with level gauge	
		Drain cock with barb fitting	With drain guide	With drain cock	With drain guide	With drain cock	With drain guide
AC20C-V-D	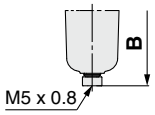		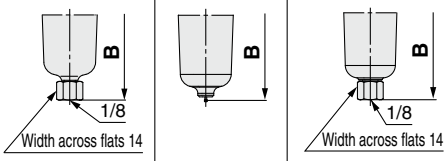				
AC30C-V-D to AC40C-06-V-D	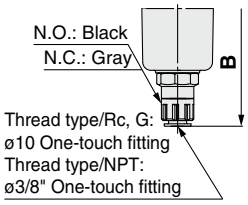	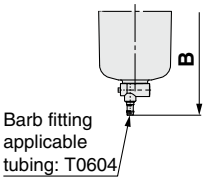	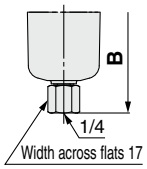	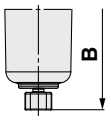	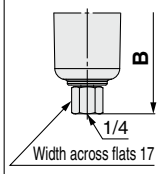	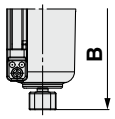	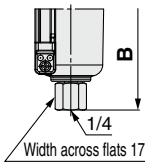

Model	Standard specifications																			
												Bracket mount								
	P_1	P_2	P_3	A	B	C	E	F	G	J	K	M	N	Q_1	Q_2	R	S	U	V_1	V_2
AC20C-V-D	1/8, 1/4	1/8	1/8	169.6	87.6	48.5	—	41.6	40	21	2	30	43.2	24	33	5.5	11.5	3.5	29	38
AC30C-V-D	1/4, 3/8	1/8	1/4	224.6	115.4	55	30	55.1	50	26.5	3.5	41	57.2	35	—	7	14	6	42.5	42.5
AC40C-V-D	1/4, 3/8, 1/2	1/8	3/8	295.6	147.1	69.7	38.4	72.6	75	35.5	—	50	75.2	40	55	9	18	7	50	65
AC40C-06-V-D	3/4	1/8	1/2	315.6	149.1	71.7	38.4	77.6	75	35.5	—	50	80.2	40	55	9	18	7	50	65

Model	Optional specifications									Semi-standard specifications					
	Square embedded type pressure gauge		Digital pressure switch		Round type pressure gauge		Round type pressure gauge (with color zone)		With auto drain	PC/PA bowl		Metal bowl		Metal bowl with level gauge	
										With barb fitting	With drain guide	With drain cock	With drain guide	With drain cock	With drain guide
	H	J	H	J	H	J	H	J	B	B	B	B	B	B	B
AC20C-V-D	□28	27	□27.8	37.5	ø37.5	57.5	ø37.5	58.5	104.9	—	91.4	87.4	93.9	—	—
AC30C-V-D	□28	32.5	□27.8	43	ø37.5	63	ø37.5	64	157.1	123.9	122.2	117.8	122.3	137.8	142.3
AC40C-V-D	□28	41.5	□27.8	52	ø42.5	73	ø42.5	73	186.9	155.6	153.9	149.5	154	169.5	174
AC40C-06-V-D	□28	41.5	□27.8	52	ø42.5	73	ø42.5	73	188.9	157.6	155.9	151.5	156	171.5	176

Dimensions: With Pressure Relief 3-Port Valve (V1)

AC20C-V1-D

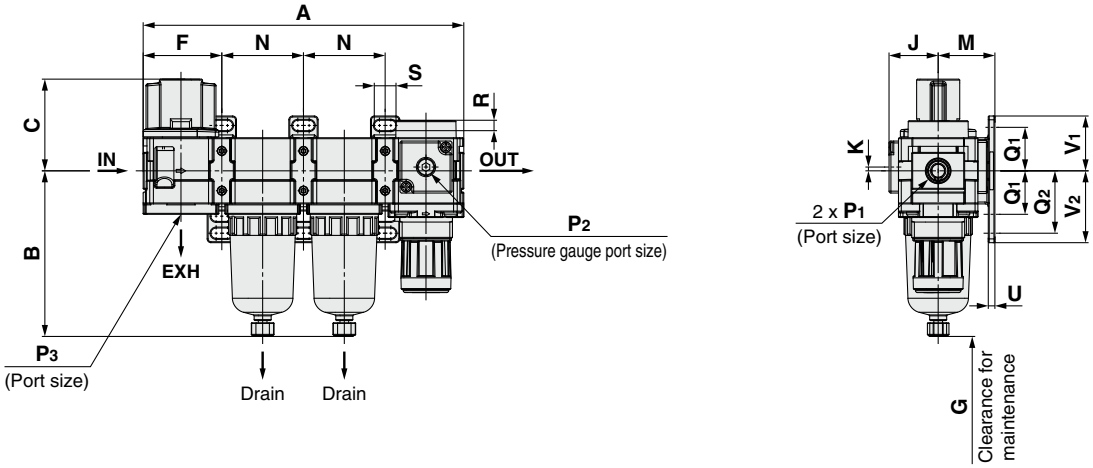

AC30C-V1-D

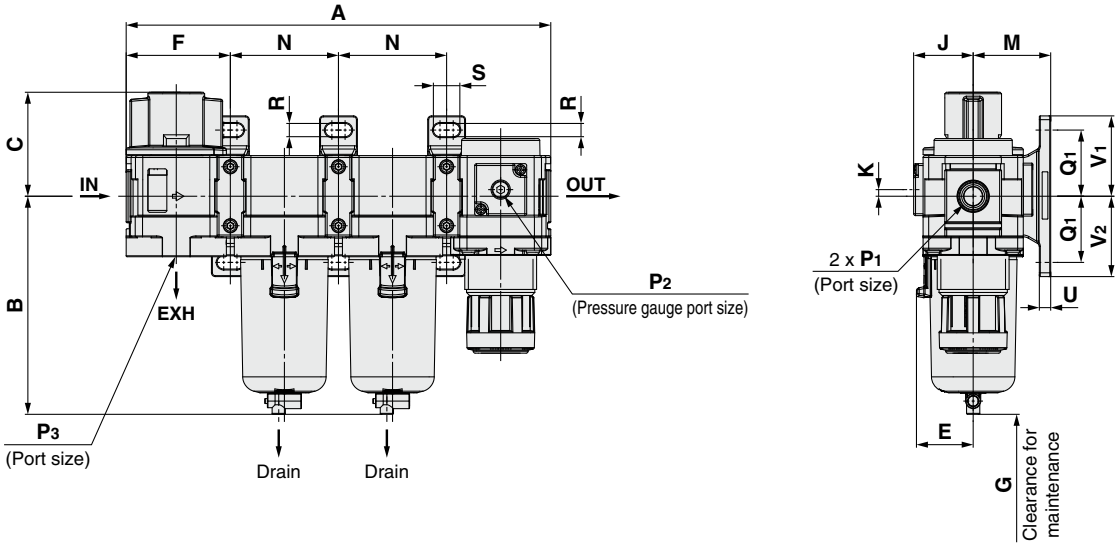

AC40C-V1-D to AC40C-06-V1-D

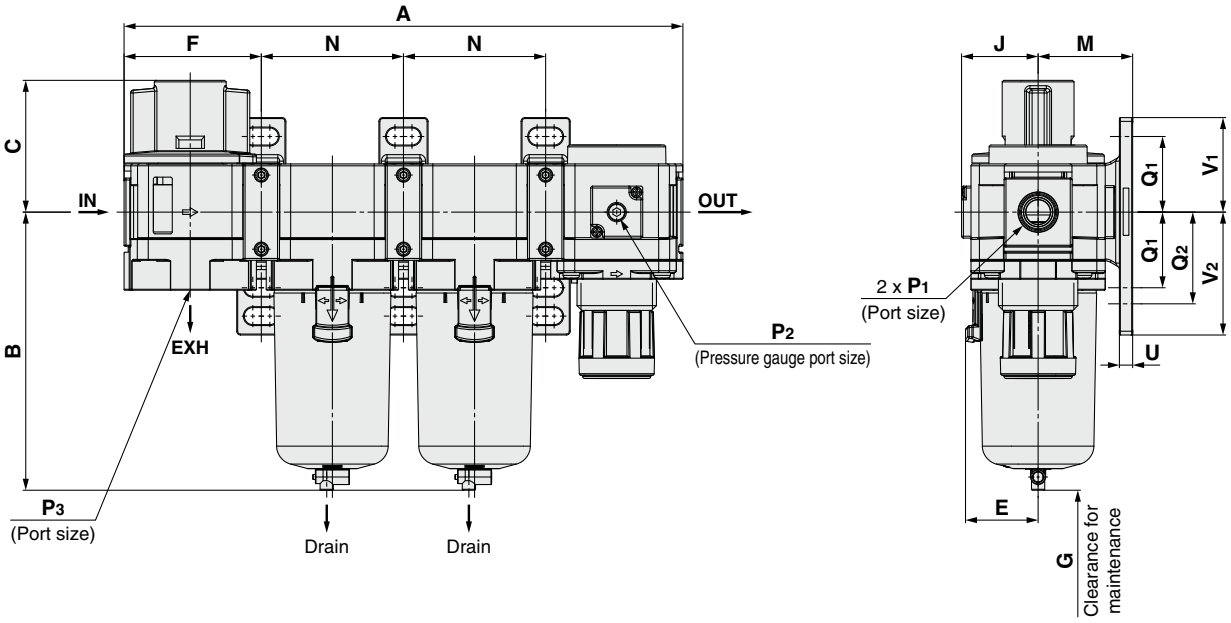

Applicable model	Optional specifications			
	Square embedded type pressure gauge	Digital pressure switch	Round type pressure gauge	Round type pressure gauge (with color zone)
AC20C-V1-D to AC40C-06-V1-D	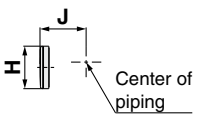	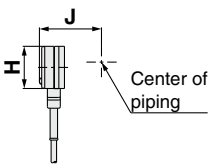	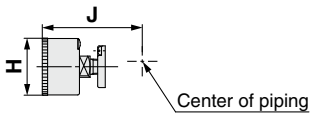	

Applicable model	Optional specifications	Semi-standard					
	With auto drain	PC/PA bowl		Metal bowl		Metal bowl with level gauge	
		Drain cock with barb fitting	With drain guide	With drain cock	With drain guide	With drain cock	With drain guide
AC20C-V1-D	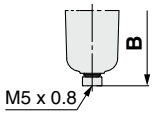		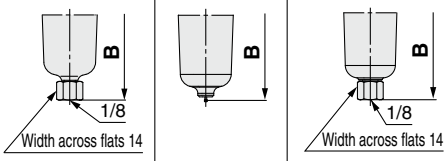				
AC30C-V1-D to AC40C-06-V1-D	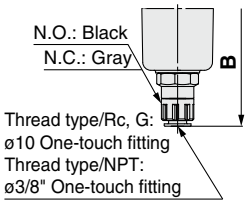	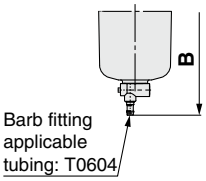	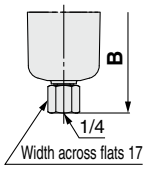	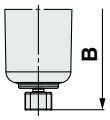	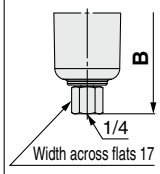	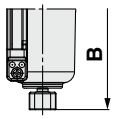	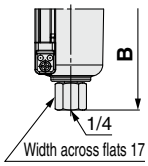

Model	Standard specifications																			
												Bracket mount								
	P_1	P_2	P_3	A	B	C	E	F	G	J	K	M	N	Q_1	Q_2	R	S	U	V_1	V_2
AC20C-V1-D	1/8, 1/4	1/8	1/8	169.6	87.6	48.5	—	41.6	40	26	2	30	43.2	24	33	5.5	11.5	3.5	29	38
AC30C-V1-D	1/4, 3/8	1/8	1/4	224.6	115.4	55	30	55.1	50	31.5	3.5	41	57.2	35	—	7	14	6	42.5	42.5
AC40C-V1-D	1/4, 3/8, 1/2	1/8	3/8	295.6	147.1	69.7	38.4	72.6	75	40.5	—	50	75.2	40	55	9	18	7	50	65
AC40C-06-V1-D	3/4	1/8	1/2	315.6	149.1	71.7	38.4	77.6	75	40.5	—	50	80.2	40	55	9	18	7	50	65

Model	Optional specifications									Semi-standard specifications					
	Square embedded type pressure gauge		Digital pressure switch		Round type pressure gauge		Round type pressure gauge (with color zone)		With auto drain	PC/PA bowl		Metal bowl		Metal bowl with level gauge	
										With barb fitting	With drain guide	With drain cock	With drain guide	With drain cock	With drain guide
	H	J	H	J	H	J	H	J	B	B	B	B	B	B	B
AC20C-V1-D	□28	27	□27.8	37.5	ø37.5	62.5	ø37.5	63.5	104.9	—	91.4	87.4	93.9	—	—
AC30C-V1-D	□28	32.5	□27.8	43	ø37.5	68	ø37.5	69	157.1	123.9	122.2	117.8	122.3	137.8	142.3
AC40C-V1-D	□28	41.5	□27.8	52	ø42.5	78	ø42.5	78	186.9	155.6	153.9	149.5	154	169.5	174
AC40C-06-V1-D	□28	41.5	□27.8	52	ø42.5	73	ø42.5	73	188.9	157.6	155.9	151.5	156	171.5	176

Air Combination

Filter Regulator + Mist Separator

AC20D-D to AC40D-D

Symbol

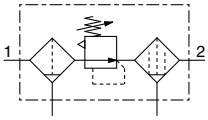

How to Order

AC 30 D – ☐ 03 DE – ☐ – ☐ – D

❶ ❷ ❸ ❹ ❺ ❻

Option and Semi-standard Symbol Selection

- Select one each for **a** to **i**.
- When more than one specification is required, indicate in alphanumeric order.

Example) AC30D-F03DE1-16NR-D

			Symbol	Description	❶ Body size 20	30	40
❷	Pipe thread type		**Nil**	Rc	●	●	●
			N[*1]	NPT	●	●	●
			F[*2]	G	●	●	●
			+				
❸	Port size		**01**	1/8	●	—	—
			02	1/4	●	●	●
			03	3/8	—	●	●
			04	1/2	—	—	●
			06	3/4	—	—	●
			+				
❹	Option[*3]	a Float type auto drain	**Nil**	Without auto drain	●	●	●
			C[*4]	N.C. (Normally closed) Drain port is closed when pressure is not applied.	●	●	●
			D[*5]	N.O. (Normally open) Drain port is open when pressure is not applied.	—	●	●
			+				
		b Pressure gauge[*6, *7]	**Nil**	Without pressure gauge	●	●	●
			E	Square embedded type pressure gauge (with limit indicator)	●	●	●
			G	Round type pressure gauge (with limit indicator)	●	●	●
			M	Round type pressure gauge (with color zone)	●	●	●
		b Digital pressure switch	**E1**	Output: NPN output, Electrical entry: Wiring bottom entry	●	●	●
			E2	Output: NPN output, Electrical entry: Wiring top entry	●	●	●
			E3	Output: PNP output, Electrical entry: Wiring bottom entry	●	●	●
			E4	Output: PNP output, Electrical entry: Wiring top entry	●	●	●
			+				
❺	Attachment	c Pressure relief 3-port valve	**Nil**	Without attachment	●	●	●
			V	Mounting position: AW + AFM + **VHS**	●	●	●
			V1[*8]	Mounting position: **VHS** + AW☐K + AFM	●	●	●
			+				
❻	Semi-standard	d Set pressure[*9]	**Nil**	0.05 to 0.85 MPa setting	●	●	●
			1	0.02 to 0.2 MPa setting	●	●	●
			+				
		e Bowl[*10]	**Nil**	Polycarbonate bowl	●	●	●
			2	Metal bowl	●	●	●
			6	Nylon bowl	●	●	●
			8	Metal bowl with level gauge	—	●	●
			C	With bowl guard	●	—[*11]	—[*11]
			6C	With bowl guard (Nylon bowl)	●	—[*12]	—[*12]
			+				
		f Filter regulator Mist separator drain port[*13]	**Nil**	With drain cock	●	●	●
			J[*14]	Drain guide 1/8	●	—	—
				Drain guide 1/4	—	●	●
			W[*15]	Drain cock with barb fitting (for ø6 x ø4 nylon tube)	—	●	●
			+				
		g Exhaust mechanism	**Nil**	Relieving type	●	●	●
			N	Non-relieving type	●	●	●
			+				
		h Flow direction	**Nil**	Flow direction: Left to right	●	●	●
			R	Flow direction: Right to left	●	●	●

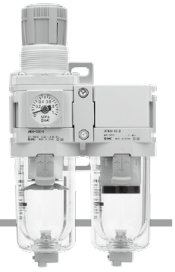

AC30D-D

	Symbol	Description	❶ Body size 20	30	40
❻ Semi-standard i Unit	Nil	Unit on product label: MPa, °C, Pressure gauge in SI units: MPa	●	●	●
	Z*16	Unit on product label: psi, °F, Pressure gauge: MPa/psi dual scale	○*18	○*18	○*18
	ZA*17	Digital pressure switch: With unit selection function	△*19	△*19	△*19

*1 Drain guide is NPT1/8 (applicable to the AC20D-D) and NPT1/4 (applicable to the AC30D-D to AC40D-D). The auto drain port comes with a ø3/8" One-touch fitting (applicable to the AC30D-D to AC40D-D).
*2 Drain guide is G1/8 (applicable to the AC20D-D) and G1/4 (applicable to the AC30D-D to AC40D-D).
*3 Options G and M are not assembled and supplied loose at the time of shipment.
*4 When pressure is not applied, condensate which does not start the auto drain mechanism will be left in the bowl. Releasing the residual condensate before ending operations for the day is recommended.
*5 If the compressor is small (0.75 kW, discharge flow is less than 100 L/min (ANR)), air leakage from the drain cock may occur during the start of operations. N.C. type is recommended.
*6 When the pressure gauge is attached, a 1.0 MPa pressure gauge will be fitted for standard (0.85 MPa) type. 0.4 MPa pressure gauge for 0.2 MPa type.
*7 When no pressure gauge or pressure gauge "G" or "M" is selected, it is not possible to change to an "E," "E1," "E2," "E3," or "E4" later.
*8 When attachment "V1" is selected, the regulator will be the type with a backflow function. Therefore, even if no pressure gauge or pressure gauge "G" or "M" is selected, it is possible to change the pressure gauge later.
Additionally, when performing maintenance work, make sure that the outlet pressure is released to atmospheric pressure using a pressure gauge.
*9 Pressure can be set higher than the specification pressure in some cases, but use pressure within the specification range.
*10 Refer to chemical data on pages 91 and 129 for chemical resistance of the bowl.
*11 A bowl guard is provided as standard equipment (polycarbonate).
*12 A bowl guard is provided as standard equipment (nylon).
*13 The combination of float type auto drain C and D is not available.
*14 Without a valve function
*15 The combination of metal bowl 2 and 8 is not available.
*16 For the pipe thread type: NPT
This product is for overseas use only according to the New Measurement Act. (The SI unit type is provided for use in Japan.)
Cannot be used with M: Round type pressure gauge (with color zone). Available by request for special.
The digital pressure switch will be equipped with the unit selection function, setting to psi initially.
*17 For options: E1, E2, E3, E4
This product is for overseas use only according to the New Measurement Act. (The SI unit is provided for use in Japan.)
*18 ○: For the pipe thread type: NPT only
*19 △: Select with options: E1, E2, E3, E4.

Standard Specifications

Model			AC20D-D	AC30D-D	AC40D-D	AC40D-06-D
Component	Filter Regulator	[AW]	AW20-D	AW30-D	AW40-D	AW40-06-D
	Mist Separator	[AFM]	AFM20-D	AFM30-D	AFM40-D	AFM40-06-D
Port size			1/8, 1/4	1/4, 3/8	1/4, 3/8, 1/2	3/4
Pressure gauge port size*1		[AW]	1/8			
Fluid			Air			
Ambient and fluid temperatures*2			–5 to 60°C (No freezing)			
Proof pressure			1.5 MPa			
Max. operating pressure			1.0 MPa			
Auto drain minimum operating pressure	N.C.	[AW/AFM]	0.1 MPa	0.15 MPa		
	N.O.	[AW/AFM]	—	0.1 MPa		
Set pressure range		[AW]	0.05 to 0.85 MPa			
Max. flow capacity*3		[AFM]	200 L/min (ANR)	450 L/min (ANR)	1100 L/min (ANR)	
Nominal filtration rating*4		[AW]	5 μm			
		[AFM]	0.3 μm (99.9% filtered particle size)			
Outlet side oil mist concentration*5, *6		[AFM]	Max. 1.0 mg/m^3 (≈ 0.8 ppm)			
Compressed air purity class*7			ISO 8573-1:2010 [3 : 4 : 3]*8			
Drain capacity		[AW/AFM]	8 cm^3	25 cm^3	45 cm^3	
Bowl material		[AW/AFM]	Polycarbonate			
Bowl guard		[AW/AFM]	Semi-standard (Steel)	Standard (Polycarbonate)		
Construction		[AW]	Relieving type			
Weight			0.30 kg	0.58 kg	1.12 kg	1.21 kg

*1 Pressure gauge connection threads are not available for F.R.L. unit with a square embedded type pressure gauge or with a digital pressure switch.
*2 –5 to 50°C for the products with the digital pressure switch
*3 Mist separator inlet pressure: 0.7 MPa. Flow at 20°C, atmospheric pressure, and 65% of the relative humidity
The maximum flow capacity varies depending on the inlet pressure.
Keep the air flow within the maximum flow capacity to prevent an outflow of lubricant to the outlet side.
*4 For the following conditions in accordance with [Test condition: ISO 8573-4:2001, Test method ISO 12500-3:2009 compliant] in addition to the conditions above
Conditions: When a new element is used, and the flow capacity, inlet pressure, and the amount of solid bodies on the filter inlet side are stable
*5 The outlet side oil mist concentration for the following conditions in accordance with [Test condition: ISO 8573-2:2007, Test method ISO 12500-1:2007 compliant] in addition to the conditions above
Conditions: When a new element is used, the oil mist concentration on the filter inlet side is 10 mg/m^3, and the flow capacity, inlet pressure, and the oil mist concentration on the filter inlet side are stable
*6 The bowl seal and other O-rings are slightly lubricated.
*7 The compressed air purity class is indicated based on ISO 8573-1:2010 Compressed air – Part 1: Contaminants and purity classes.
For details on this standard, refer to page 131.
*8 The compressed air quality class on the inlet side is [7 : 4 : 4].

Dimensions

AC20D-D

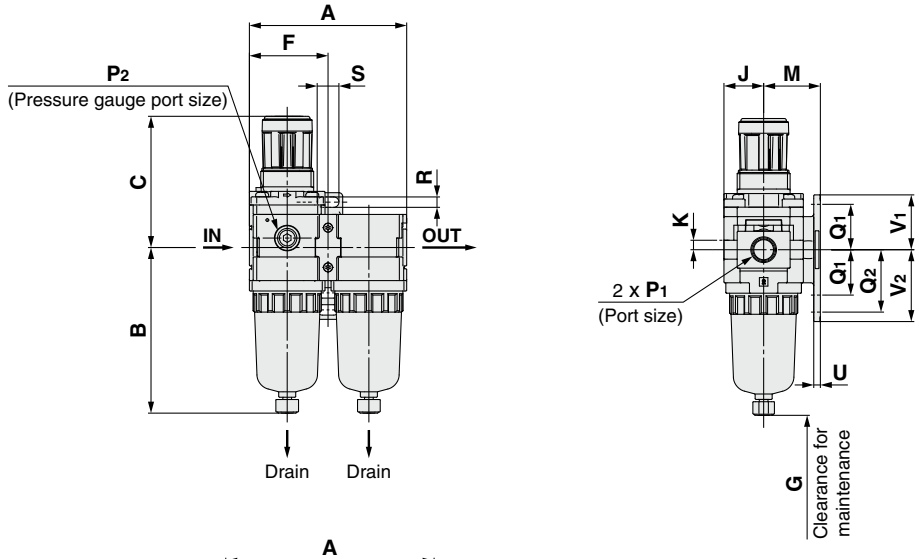

AC30D-D

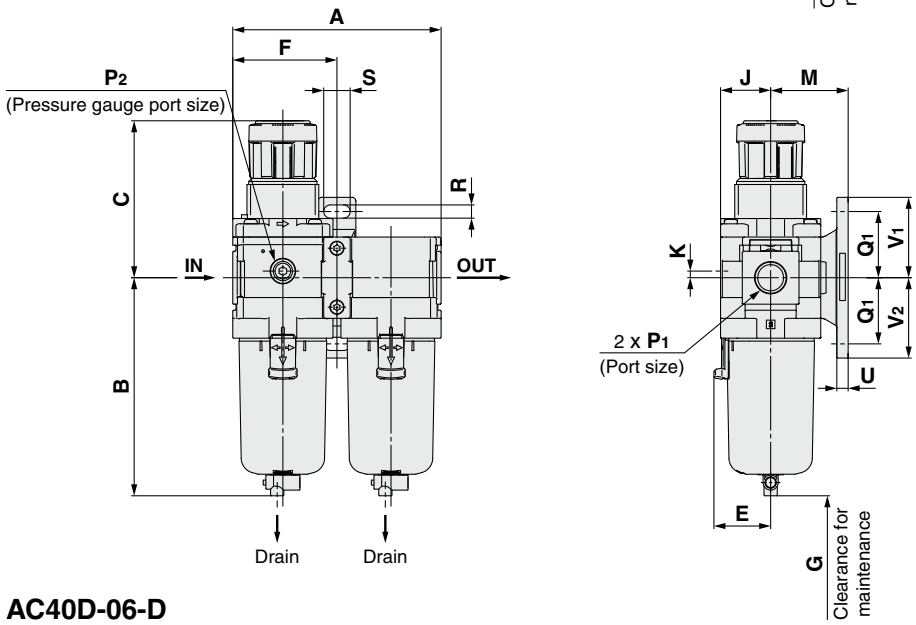

AC40D-D to AC40D-06-D

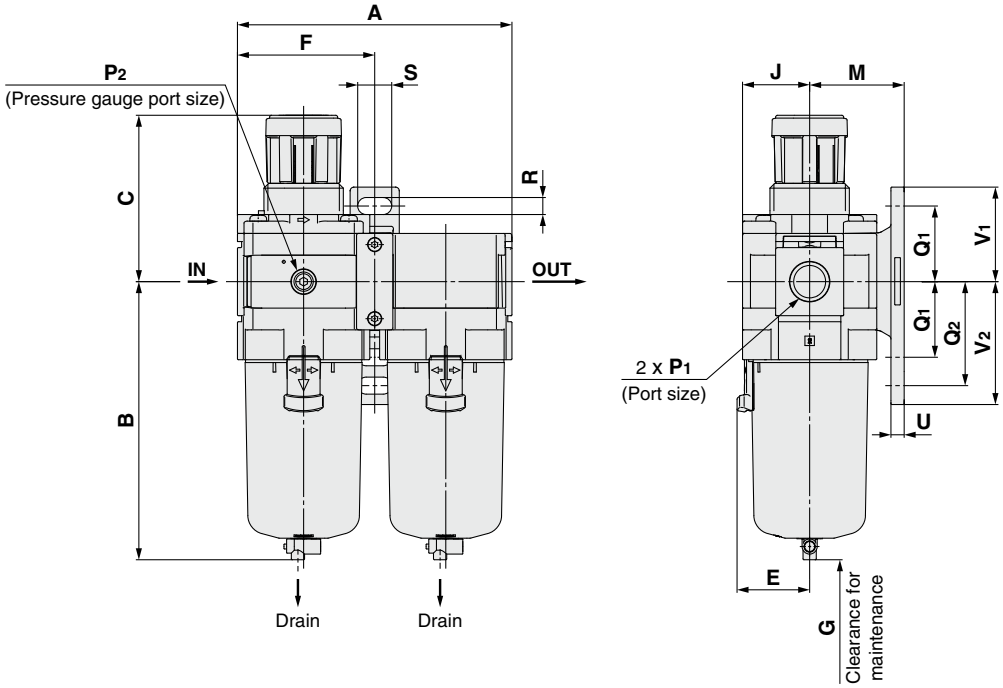

Applicable model	Optional specifications			
	Square embedded type pressure gauge	Digital pressure switch	Round type pressure gauge	Round type pressure gauge (with color zone)
AC20D-D to AC40D-06-D	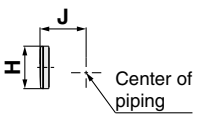	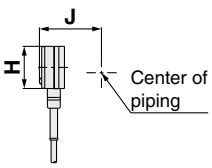	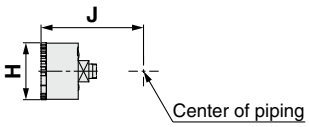	

Applicable model	Optional specifications	Semi-standard					
	With auto drain	PC/PA bowl		Metal bowl		Metal bowl with level gauge	
		Drain cock with barb fitting	With drain guide	With drain cock	With drain guide	With drain cock	With drain guide
AC20D-D	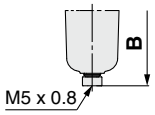		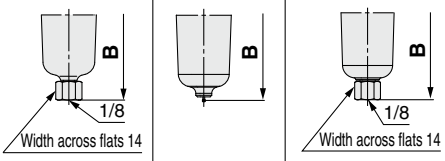				
AC30D-D to AC40D-06-D	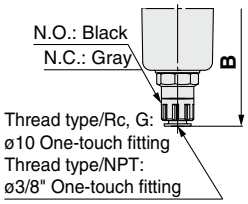	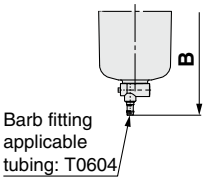	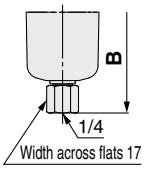	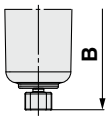	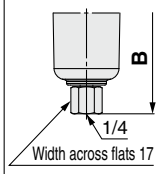	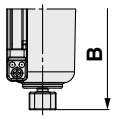	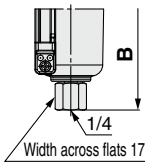

Model	Standard specifications																	
											Bracket mount							
	P_1	P_2	A	B	C	E	F	G	J	K	M	Q_1	Q_2	R	S	U	V_1	V_2
AC20D-D	1/8, 1/4	1/8	83.2	87.6	71.8	—	41.6	45	21	5	30	24	33	5.5	11.5	3.5	29	38
AC30D-D	1/4, 3/8	1/8	110.2	115.4	86.5	30	55.1	55	26.5	3.5	41	35	—	7	14	6	42.5	42.5
AC40D-D	1/4, 3/8, 1/2	1/8	145.2	147.1	91.5	38.4	72.6	80	35.5	—	50	40	55	9	18	7	50	65
AC40D-06-D	3/4	1/8	155.2	149.1	93	38.4	77.6	80	35.5	—	50	40	55	9	18	7	50	65

Model	Optional specifications									Semi-standard specifications					
	Square embedded type pressure gauge		Digital pressure switch		Round type pressure gauge		Round type pressure gauge (with color zone)		With auto drain	PC/PA bowl		Metal bowl		Metal bowl with level gauge	
										With barb fitting	With drain guide	With drain cock	With drain guide	With drain cock	With drain guide
	H	J	H	J	H	J	H	J	B	B	B	B	B	B	B
AC20D-D	□28	27	□27.8	37.5	ø37.5	57.5	ø37.5	58.5	104.9	—	91.4	87.4	93.9	—	—
AC30D-D	□28	32.5	□27.8	43	ø37.5	63	ø37.5	64	157.1	123.9	122.2	117.8	122.3	137.8	142.3
AC40D-D	□28	41.5	□27.8	52	ø42.5	73	ø42.5	73	186.9	155.6	153.9	149.5	154	169.5	174
AC40D-06-D	□28	41.5	□27.8	52	ø42.5	73	ø42.5	73	188.9	157.6	155.9	151.5	156	171.5	176

Dimensions: With Pressure Relief 3-Port Valve (V)

AC20D-V-D

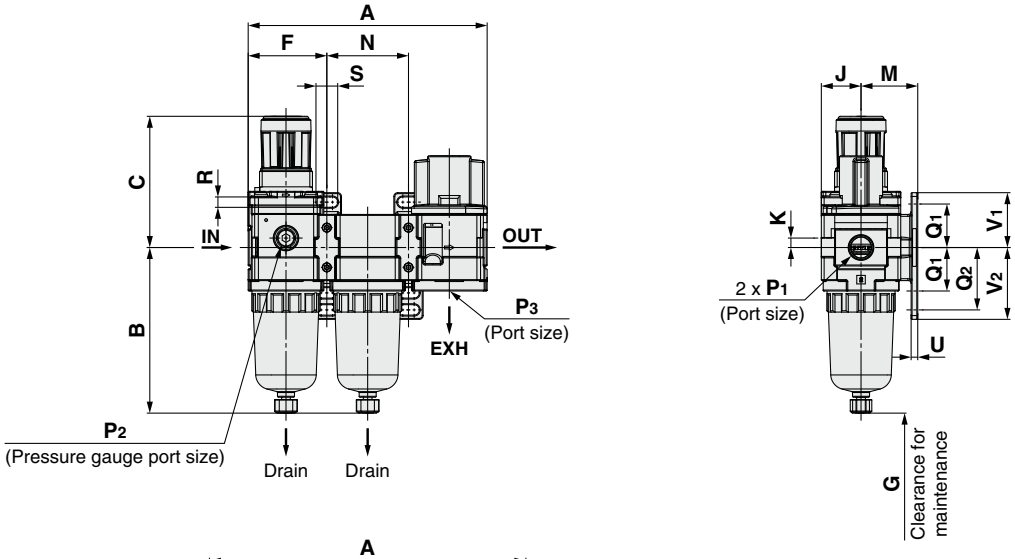

AC30D-V-D

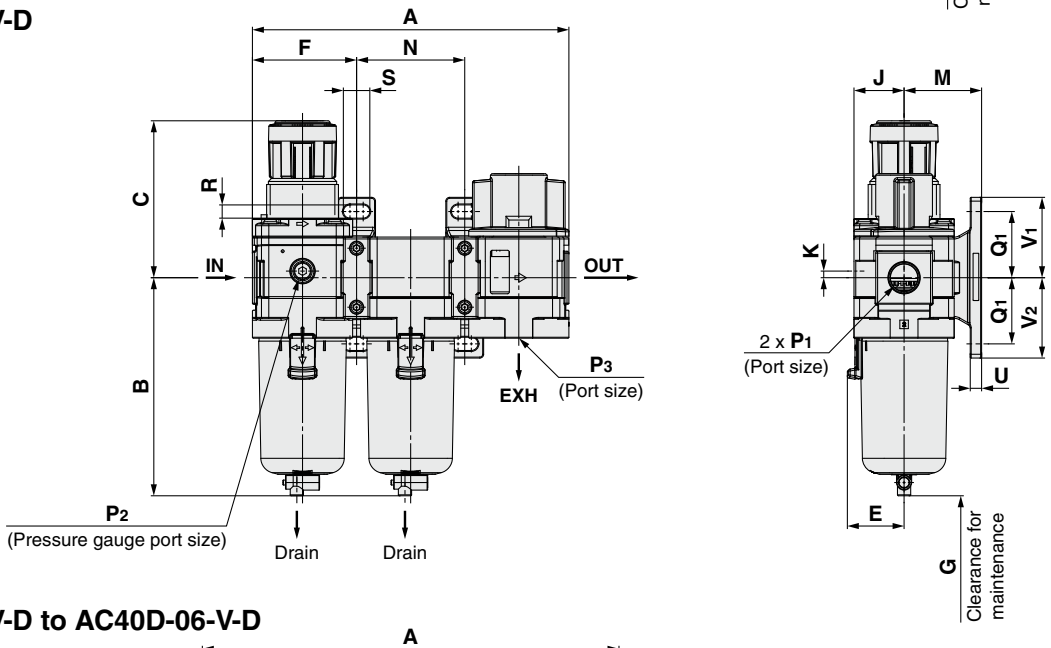

AC40D-V-D to AC40D-06-V-D

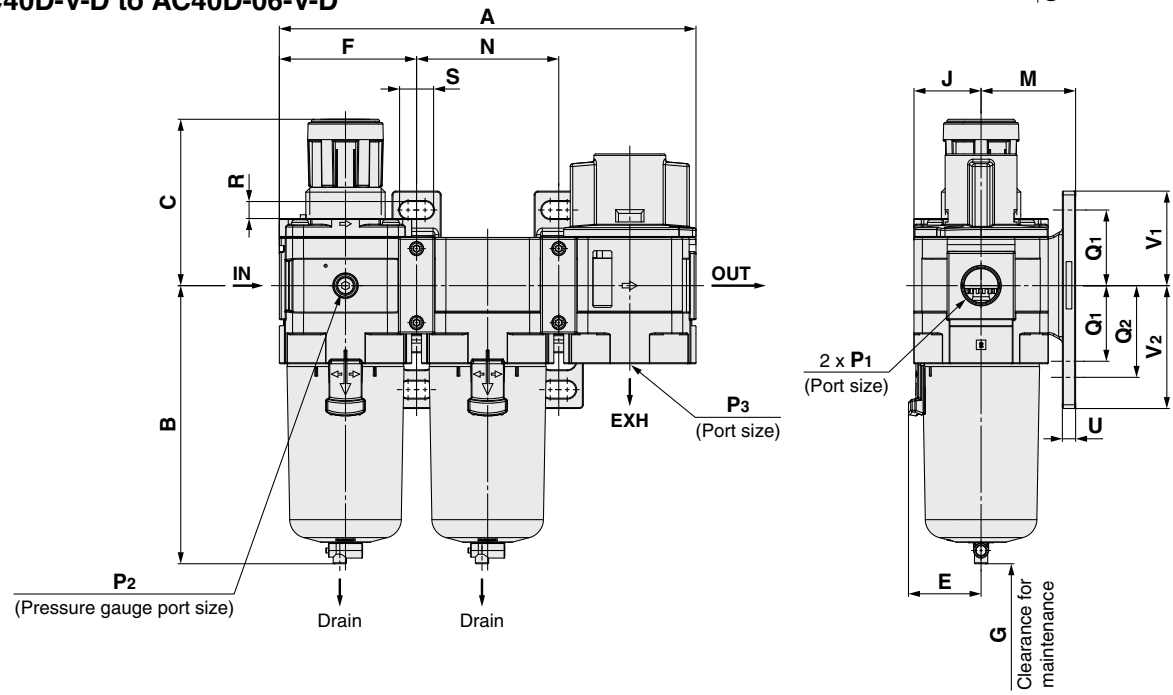

Applicable model	Optional specifications			
	Square embedded type pressure gauge	Digital pressure switch	Round type pressure gauge	Round type pressure gauge (with color zone)
AC20D-V-D to AC40D-06-V-D	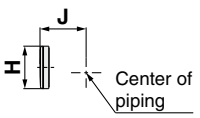	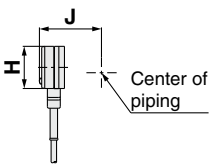	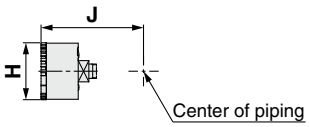	

Applicable model	Optional specifications	Semi-standard					
	With auto drain	PC/PA bowl		Metal bowl		Metal bowl with level gauge	
		Drain cock with barb fitting	With drain guide	With drain cock	With drain guide	With drain cock	With drain guide
AC20D-V-D	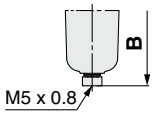		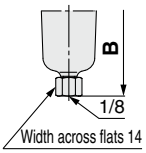	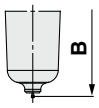	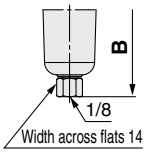		
AC30D-V-D to AC40D-06-V-D	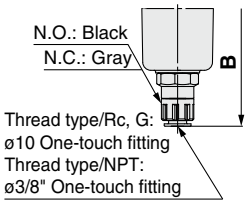	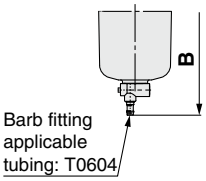	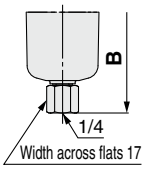	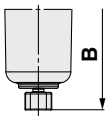	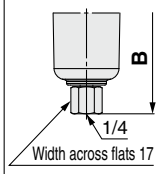	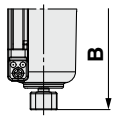	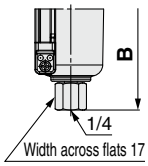

Model	Standard specifications																			
												Bracket mount								
	P_1	P_2	P_3	A	B	C	E	F	G	J	K	M	N	Q_1	Q_2	R	S	U	V_1	V_2
AC20D-V-D	1/8, 1/4	1/8	1/8	126.4	87.6	71.8	—	41.6	40	21	5	30	43.2	24	33	5.5	11.5	3.5	29	38
AC30D-V-D	1/4, 3/8	1/8	1/4	167.4	115.4	86.5	30	55.1	55	26.5	3.5	41	57.2	35	—	7	14	6	42.5	42.5
AC40D-V-D	1/4, 3/8, 1/2	1/8	3/8	220.4	147.1	91.5	38.4	72.6	80	35.5	—	50	75.2	40	55	9	18	7	50	65
AC40D-06-V-D	3/4	1/8	1/2	235.4	149.1	93	38.4	77.6	80	35.5	—	50	80.2	40	55	9	18	7	50	65

Model	Optional specifications									Semi-standard specifications					
	Square embedded type pressure gauge		Digital pressure switch		Round type pressure gauge		Round type pressure gauge (with color zone)		With auto drain	PC/PA bowl		Metal bowl		Metal bowl with level gauge	
										With barb fitting	With drain guide	With drain cock	With drain guide	With drain cock	With drain guide
	H	J	H	J	H	J	H	J	B	B	B	B	B	B	B
AC20D-V-D	□28	27	□27.8	37.5	ø37.5	57.5	ø37.5	58.5	104.9	—	91.4	87.4	93.9	—	—
AC30D-V-D	□28	32.5	□27.8	43	ø37.5	63	ø37.5	64	157.1	123.9	122.2	117.8	122.3	137.8	142.3
AC40D-V-D	□28	41.5	□27.8	52	ø42.5	73	ø42.5	73	186.9	155.6	153.9	149.5	154	169.5	174
AC40D-06-V-D	□28	41.5	□27.8	52	ø42.5	73	ø42.5	73	188.9	157.6	155.9	151.5	156	171.5	176

Dimensions: With Pressure Relief 3-Port Valve (V1)

AC20D-V1-D

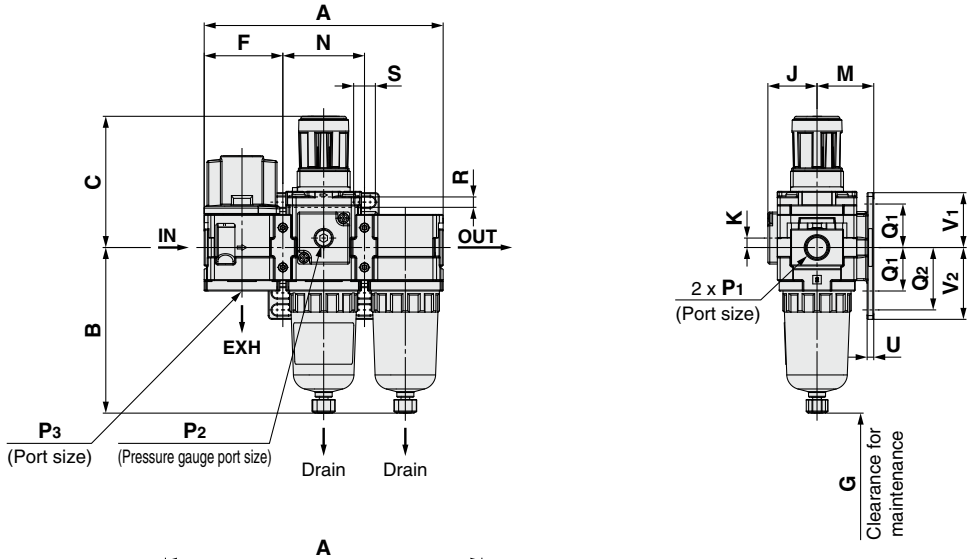

AC30D-V1-D

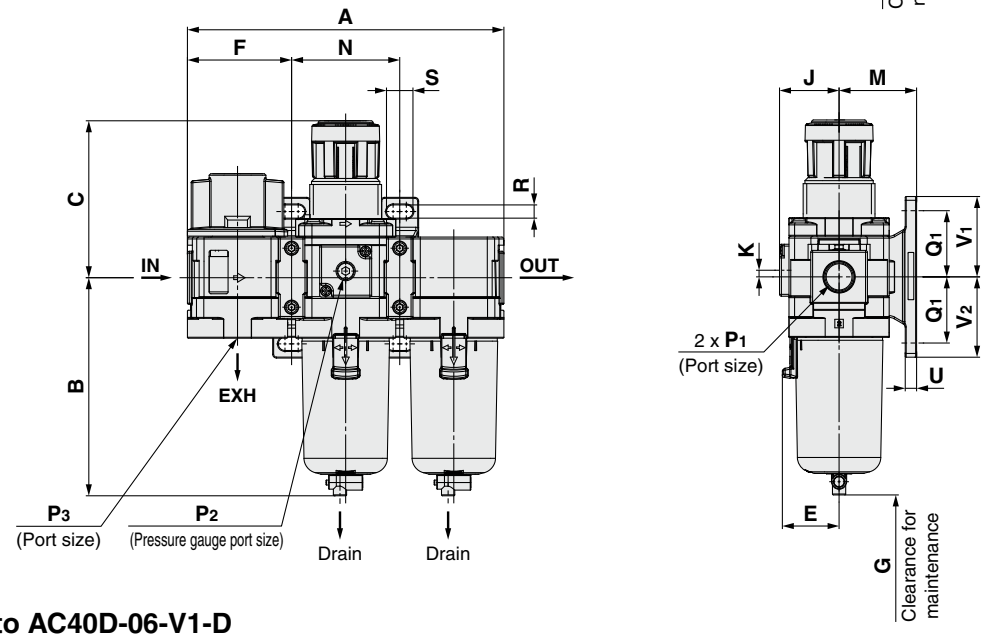

AC40D-V1-D to AC40D-06-V1-D

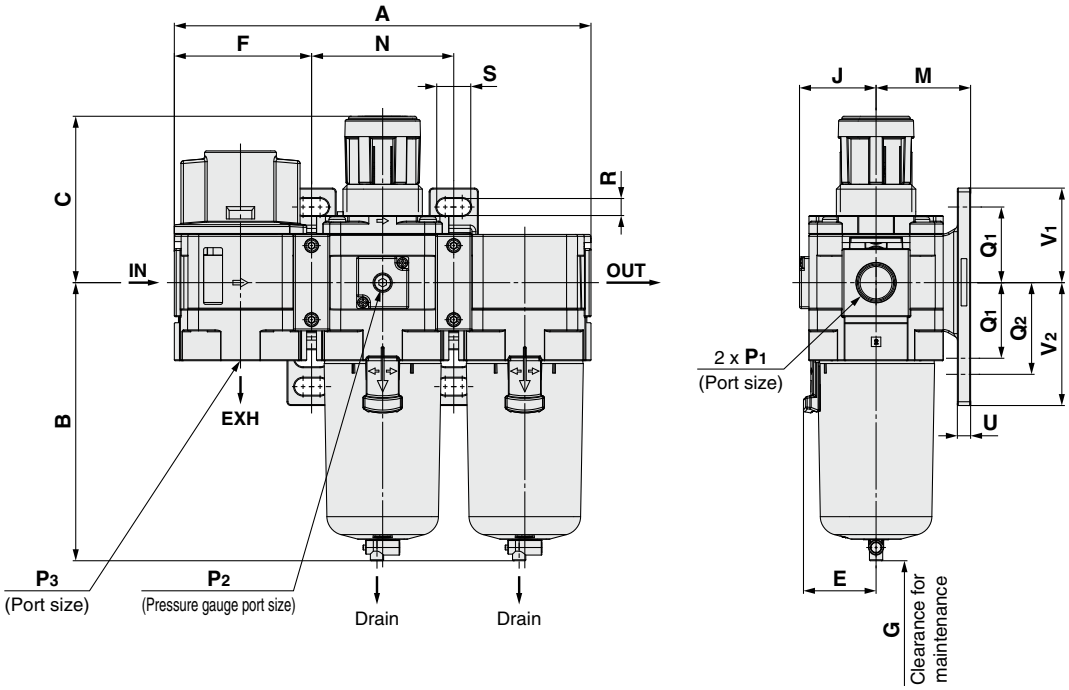

Applicable model	Optional specifications			
	Square embedded type pressure gauge	Digital pressure switch	Round type pressure gauge	Round type pressure gauge (with color zone)
AC20D-V1-D to AC40D-06-V1-D	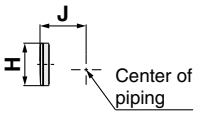	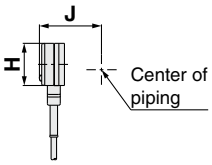	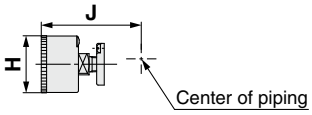	

Applicable model	Optional specifications	Semi-standard					
	With auto drain	PC/PA bowl		Metal bowl		Metal bowl with level gauge	
		Drain cock with barb fitting	With drain guide	With drain cock	With drain guide	With drain cock	With drain guide
AC20D-V1-D	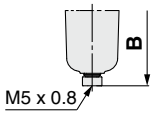		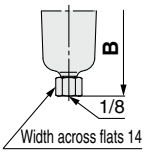	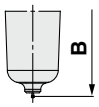	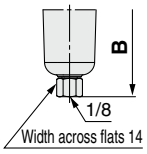		
AC30D-V1-D to AC40D-06-V1-D	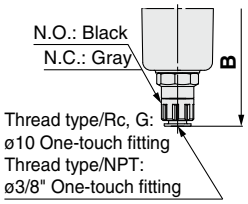	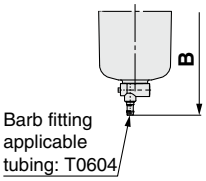	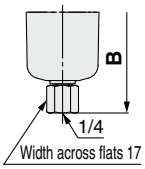	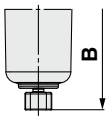	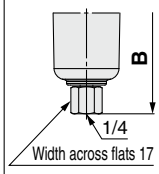	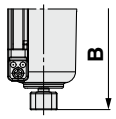	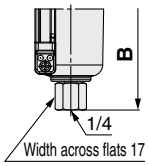

Model	Standard specifications																			
												Bracket mount								
	P_1	P_2	P_3	A	B	C	E	F	G	J	K	M	N	Q_1	Q_2	R	S	U	V_1	V_2
AC20D-V1-D	1/8, 1/4	1/8	1/8	126.4	87.6	71.8	—	41.6	40	26	5	30	43.2	24	33	5.5	11.5	3.5	29	38
AC30D-V1-D	1/4, 3/8	1/8	1/4	167.4	115.4	86.5	30	55.1	55	31.5	3.5	41	57.2	35	—	7	14	6	42.5	42.5
AC40D-V1-D	1/4, 3/8, 1/2	1/8	3/8	220.4	147.1	91.5	38.4	72.6	80	40.5	—	50	75.2	40	55	9	18	7	50	65
AC40D-06-V1-D	3/4	1/8	1/2	235.4	149.1	93	38.4	77.6	80	40.5	—	50	80.2	40	55	9	18	7	50	65

Model	Optional specifications									Semi-standard specifications					
	Square embedded type pressure gauge		Digital pressure switch		Round type pressure gauge		Round type pressure gauge (with color zone)		With auto drain	PC/PA bowl		Metal bowl		Metal bowl with level gauge	
										With barb fitting	With drain guide	With drain cock	With drain guide	With drain cock	With drain guide
	H	J	H	J	H	J	H	J	B	B	B	B	B	B	B
AC20D-V1-D	□28	27	□27.8	37.5	ø37.5	62.5	ø37.5	63.5	104.9	—	91.4	87.4	93.9	—	—
AC30D-V1-D	□28	32.5	□27.8	43	ø37.5	68	ø37.5	69	157.1	123.9	122.2	117.8	122.3	137.8	142.3
AC40D-V1-D	□28	41.5	□27.8	52	ø42.5	78	ø42.5	78	186.9	155.6	153.9	149.5	154	169.5	174
AC40D-06-V1-D	□28	41.5	□27.8	52	ø42.5	73	ø42.5	73	188.9	157.6	155.9	151.5	156	171.5	176

AC-D Series
Option / Accessory / Attachment Part No. List

Section	Description \ Model			Part no.					
				For AC20-D For AC20A-D For AC20B-D For AC20C-D For AC20D-D	For AC30-D For AC30A-D For AC30B-D For AC30C-D For AC30D-D	For AC40-D For AC40A-D For AC40B-D For AC40C-D For AC40D-D	For AC40-06-D For AC40A-06-D For AC40B-06-D For AC40C-06-D For AC40D-06-D	For AC50-D For AC50A-D For AC50B-D —	For AC60-D For AC60A-D For AC60B-D —
Option	*1 Pressure gauge	Round type	Standard	G36-10-□01		G46-10-□01			
			0.02 to 0.2 MPa setting	G36-4-□01		G46-4-□01			
		Round type (with color zone)	Standard	G36-10-□01-L		G46-10-□01-L			
			0.02 to 0.2 MPa setting	G36-4-□01-L		G46-4-□01-L			
		Square embedded type*2	Standard	GC3-10AS-D [GC3P-030AS (Pressure gauge cover only)]					
			0.02 to 0.2 MPa setting	GC3-4AS-D [GC3P-030AS (Pressure gauge cover only)]					
	Digital pressure switch		NPN output, Wiring bottom entry	ISE35-N-25-MLA-X523 [ISE35-N-25-M (Switch body only)]*3					
			NPN output, Wiring top entry	ISE35-R-25-MLA-X523 [ISE35-R-25-M (Switch body only)]*3					
			PNP output, Wiring bottom entry	ISE35-N-65-MLA-X523 [ISE35-N-65-M (Switch body only)]*3					
			PNP output, Wiring top entry	ISE35-R-65-MLA-X523 [ISE35-R-65-M (Switch body only)]*3					
	Float type auto drain*4		N.C.	AD27-D	AD37-D	AD47-D			
			N.O.	—	AD38-D	AD48-D			
Accessory	Spacer		p. 57	Y200-D	Y300-D	Y400-D	Y500-D	Y600-D	
	Spacer with bracket		p. 57	Y200T-D	Y300T-D	Y400T-D	Y500T-D	Y600T-D	
Attachment	Pressure relief 3-port valve*5, *6		p. 58	VHS20-□01-D VHS20-□02-D	VHS30-□02-D VHS30-□03-D	VHS40-□02-D VHS40-□03-D VHS40-□04-D	VHS40-□06-D	VHS50-□06-D VHS50-□10-D	—
	Piping adapter*5, *6		p. 59	E200-□01-D E200-□02-D E200-□03-D	E300-□02-D E300-□03-D E300-□04-D	E400-□02-D E400-□03-D E400-□04-D E400-□06-D	E500-□06-D E500-□10-D	E600-□06-D E600-□10-D E600-□12-D E600-□14-D	
	L-shaped piping adapter*5, *6		p. 60	E200L-□01-D E200L-□02-D	E300L-□01-D E300L-□02-D E300L-□03-D	E400L-□02-D E400L-□03-D E400L-□04-D	E500L-□04-D E500L-□06-D	E600L-□04-D E600L-□06-D E600L-□10-D	
	T-shaped piping adapter*5, *6		p. 61	E200T-□01-D E200T-□02-D	E300T-□01-D E300T-□02-D E300T-□03-D	E400T-□02-D E400T-□03-D E400T-□04-D	E500T-□04-D E500T-□06-D	E600T-□04-D E600T-□06-D E600T-□10-D	
	T-spacer*5, *6	Standard	p. 62	Y210-□01-D Y210-□02-D	Y310-□01-D Y310-□02-D Y310-□03-D	Y410-□02-D Y410-□03-D Y410-□04-D	Y510-□02-D Y510-□03-D Y510-□04-D Y510-□06-D	Y610-□03-D Y610-□04-D Y610-□06-D	
		Slim type		Y210-□01-1-D Y210-□02-1-D	Y310-□01-1-D Y310-□02-1-D	Y410-□02-1-D Y410-□03-1-D	Y510-□02-1-D Y510-□03-1-D	Y610-□03-1-D Y610-□04-1-D	
	Cross spacer*5, *6	Standard	p. 63	Y24-□01-D Y24-□02-D	Y34-□01-D Y34-□02-D Y34-□03-D	Y44-□02-D Y44-□03-D Y44-□04-D	Y54-□02-D Y54-□03-D Y54-□04-D Y54-□06-D	Y64-□03-D Y64-□04-D Y64-□06-D	
		Front and back port selectable type		Y24-□01-1-D Y24-□02-1-D	Y34-□01-1-D Y34-□02-1-D Y34-□03-1-D	Y44-□02-1-D Y44-□03-1-D Y44-□04-1-D	Y54-□03-1-D Y54-□04-1-D Y54-□06-1-D	—	
	Pressure switch*6	Standard	p. 64	IS10M-20-D	IS10M-30-D	IS10M-40-D	IS10M-50-D	IS10M-60-D	
		Slim type		IS10M-20-1-D	IS10M-30-1-D	IS10M-40-1-D	IS10M-50-1-D	IS10M-60-1-D	
	Pressure switch with T-spacer*5, *6		p. 65	IS10T-20-□01-D IS10T-20-□02-D	IS10T-30-□01-D IS10T-30-□02-D IS10T-30-□03-D	IS10T-40-□02-D IS10T-40-□03-D IS10T-40-□04-D	IS10T-50-□02-D IS10T-50-□03-D IS10T-50-□04-D IS10T-50-□06-D	IS10T-60-□03-D IS10T-60-□04-D IS10T-60-□06-D	
	Pressure switch with L-shaped piping adapter*5, *6		p. 66	IS10L-20-□01-D IS10L-20-□02-D	IS10L-30-□01-D IS10L-30-□02-D IS10L-30-□03-D	IS10L-40-□02-D IS10L-40-□03-D IS10L-40-□04-D	IS10L-50-□04-D IS10L-50-□06-D	IS10L-60-□04-D IS10L-60-□06-D IS10L-60-□10-D	
	Pressure switch with piping adapter*5, *6		p. 67	IS10E-20-□01-D IS10E-20-□02-D IS10E-20-□03-D	IS10E-30-□02-D IS10E-30-□03-D IS10E-30-□04-D	IS10E-40-□02-D IS10E-40-□03-D IS10E-40-□04-D IS10E-40-□06-D	IS10E-50-□06-D IS10E-50-□10-D	IS10E-60-□06-D IS10E-60-□10-D IS10E-60-□12-D IS10E-60-□14-D	
	Right angle adapter*6		p. 68	E210T-D	E310T-D	E410T-D	—	—	—
	Reducing adapter*6		p. 68	E310R-D	E310R-D E410R-D	E410R-D	—	—	—
	Cross adapter*5, *6		p. 69	Y24M-□02-D	Y34M-□03-D	Y44M-□04-D	—	—	—
	End plate*6		p. 70	E200E-D	E300E-D	E400E-D	—	—	—

*1 □ in part numbers for a round type pressure gauge indicates a pipe thread type. No indication is necessary for R; however, indicate N for NPT. Please contact SMC regarding the connection thread NPT and pressure gauge supply for psi unit specifications.
*2 Including one O-ring and 2 mounting screws
*3 Lead wire with connector (2 m), adapter, lock pin, O-ring (1 pc.), mounting screws (2 pcs.) are attached. [ ]: Switch body only
Regarding how to order the digital pressure switch, refer to page 130.
*4 Minimum operating pressure: N.O. type–0.1 MPa; N.C. type–0.1 MPa (AD27-D) and 0.15 MPa (AD37-D/AD47-D). Please contact SMC separately for psi and °F unit display specifications.
*5 □ in attachment part numbers indicates a pipe thread type. No indication is necessary for Rc thread; however, indicate N for NPT thread, and F for G thread.
*6 Separate spacers are required for modular units.

Accessories (Spacer / Spacer with Bracket)

Spacer / Spacer with Bracket

Y 300 □ – D

❶ ❷

	Symbol	Description	❶ Body size [Applicable AC size]				
			200 [AC20]	**300** [AC30]	**400** [AC40]	**500** [AC40-06]	**600** [AC50/AC60]
❷ Bracket	**Nil**	Spacer	●	●	●	●	●
	T	Spacer with bracket	●	●	●	●	●

Spacer (Y□-D)

Spacer with bracket (Y□T-D)

Standard Specifications

Fluid	Air
Ambient and fluid temperatures	–5 to 60°C (No freezing)
Proof pressure	1.5 MPa
Max. operating pressure	1.0 MPa

Replacement Parts

Description	Material	Part no.				
		Y200-D Y200T-D	**Y300-D Y300T-D**	**Y400-D Y400T-D**	**Y500-D Y500T-D**	**Y600-D Y600T-D**
Seal	HNBR	Y220P-050S	Y320P-050S	Y420P-050S	Y520P-050S	Y620P-050S

Dimensions

Spacer

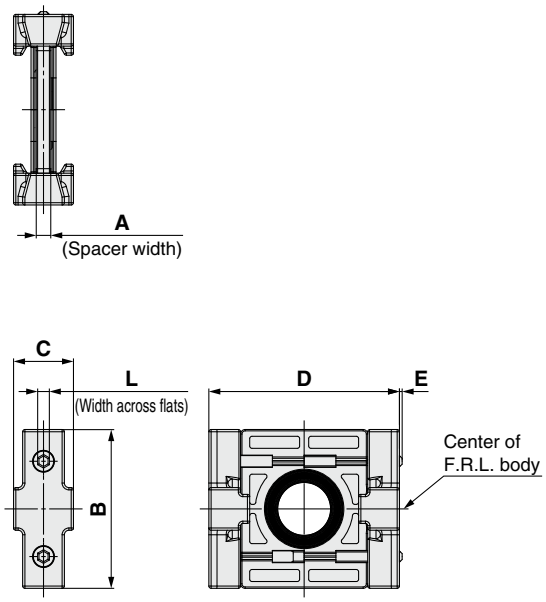

Spacer with bracket

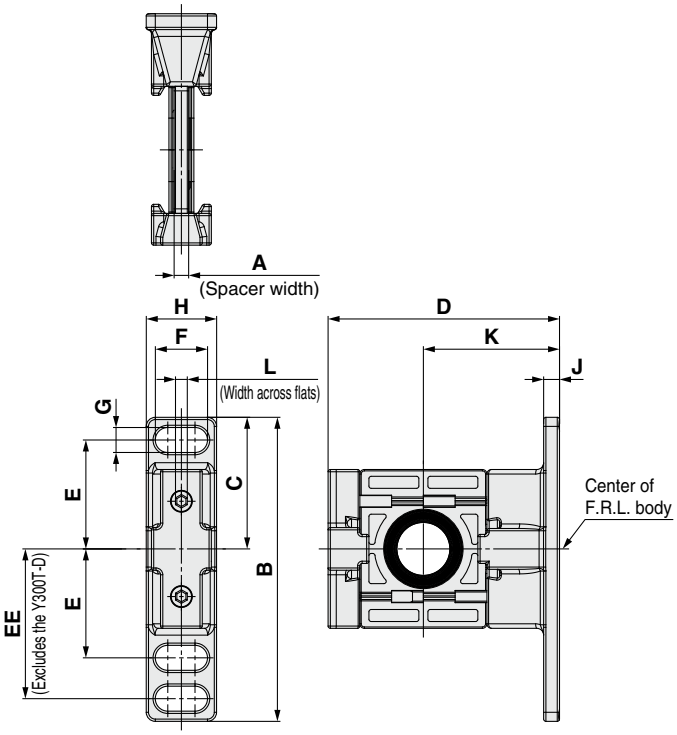

Model	A	B	C	D	E	L	Applicable size
Y200-D	3.2	35	13.2	42	0.6	2	**AC20-D**
Y300-D	4.2	43	16.2	53	—	3	**AC30-D**
Y400-D	5.2	51	19.2	71	—	3	**AC40-D**
Y500-D	5.2	54	21.2	71	—	3	**AC40-06-D**
Y600-D	6.2	64	27.2	90	—	4	**AC50-D AC60-D**

Model	A	B	C	D	E	EE	F	G	H	J	K	L	Applicable size
Y200T-D	3.2	67	29	51	24	33	11.5	5.5	15.5	3.5	30	2	**AC20-D**
Y300T-D	4.2	85	42.5	67.5	35	—	14	7	20	6	41	3	**AC30-D**
Y400T-D	5.2	115	50	85.5	40	55	18	9	26	7	50	3	**AC40-D**
Y500T-D	5.2	115	50	85.5	40	55	18	9	26	7	50	3	**AC40-06-D**
Y600T-D	6.2	140	60	115	50	70	20	11	31.2	8	70	4	**AC50-D AC60-D**

AC-D Series
Attachments

Semi-standard Symbol Selection

· Select one each for **a** and **b**.
· When more than one specification is required, indicate in alphabetical order.
Example) VHS30-N03-RZ-D

Pressure Relief 3-Port Valve: (V, V1)

· By using a pressure relief 3-port valve, pressure left in the line can be easily exhausted.

VHS 30 – □ 03 – □ – D
❶ ❷ ❸ ❹

Symbol

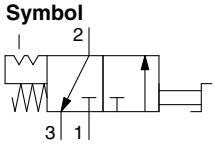

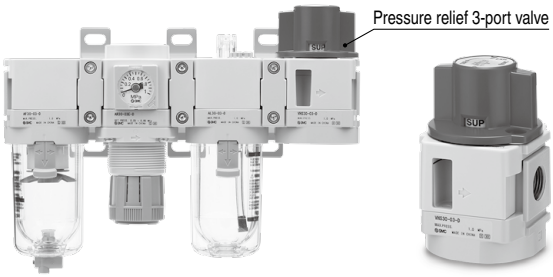

		Symbol	Description	❶ Body size [Applicable AC size]				
				20 [AC20]	**30** [AC30]	**40** [AC40]	**40** [AC40-06]	**50** [AC50/AC60]*4
❷	Pipe thread type	**Nil**	Rc*1	●	●	●	●	●
		N	NPT	●	●	●	●	●
		F	G	●	●	●	●	●
		+						
❸	Port size	**01**	1/8	●	—	—	—	—
		02	1/4	●	●	●	—	—
		03	3/8	—	●	●	—	—
		04	1/2	—	—	●	—	—
		06	3/4	—	—	—	●	●
		10	1	—	—	—	—	●
		+						
❹ Semi-standard	a Flow direction	**Nil**	Flow direction: Left to right	●	●	●	●	●
		R	Flow direction: Right to left	●	●	●	●	●
		+						
	b Unit	**Nil**	Unit on product label: MPa	●	●	●	●	●
		Z*2	Unit on product label: psi	○*3	○*3	○*3	○*3	○*3

*1 The pipe thread type for the EXH port is G.
*2 For the pipe thread type: NPT only. This product is for overseas use only according to the New Measurement Act. (The SI unit type is provided for use in Japan.)
*3 ○: For the pipe thread type: NPT only
*4 The VHS50 can be connected to the AC60.

Standard Specifications

Fluid	Air
Ambient and fluid temperatures	–5 to 60°C (No freezing)
Proof pressure	1.5 MPa
Max. operating pressure	1.0 MPa

Flow Rate Characteristics

Model	Port size		Flow rate characteristics					
			IN → OUT			OUT → EXH		
	IN, OUT	EXH	C (dm³/s·bar)	b	Cv	C (dm³/s·bar)	b	Cv
VHS20	1/8	1/8	4.0	0.41	1.1	3.7	0.42	1.1
	1/4		5.8	0.31	1.4	3.8	0.42	1.1
VHS30	1/4	1/4	8.8	0.44	2.4	8.0	0.46	2.3
	3/8		14.1	0.28	3.5	7.8	0.46	2.2
VHS40	1/4	3/8	9.5	0.49	2.8	13.3	0.47	3.6
	3/8		17.2	0.47	4.8	13.6	0.47	3.7
	1/2		26.7	0.29	6.3	13.4	0.43	3.7
VHS40-06	3/4	1/2	34.0	0.22	7.6	16.1	0.41	4.4
VHS50	3/4	1/2	45.0	0.26	10.6	23.0	0.49	6.4
	1		53.3	0.36	13.5	22.8	0.49	6.3

Caution on Mounting

· Use an air filter on the inlet side for operating protection.
· When mounting a silencer, etc., on the EXH port, refer to the operation manual.

Dimensions

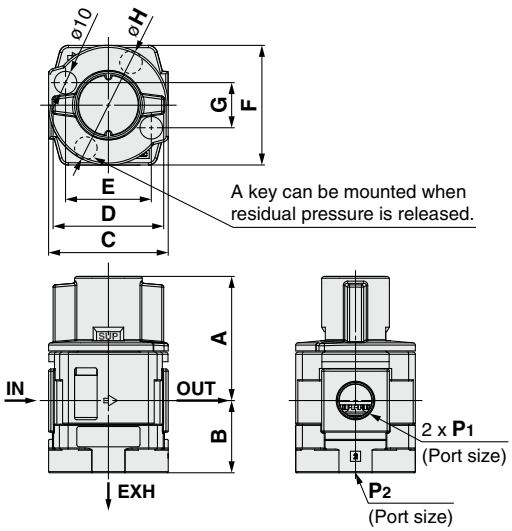

Model	P1	P2	A	B	C	D	Applicable size
VHS20-D	1/8, 1/4	1/8	48.5	23	40	37	**AC20-D**
VHS30-D	1/4, 3/8	1/4	55	32	53	49	**AC30-D**
VHS40-D	1/4, 3/8, 1/2	3/8	69.7	41.3	70	63	**AC40-D**
VHS40-06-D	3/4	1/2	71.7	43.3	75	63	**AC40-06-D**
VHS50-D	3/4, 1	1/2	86.5	44.5	90	80	**AC50-D/AC60-D**

Model	E	F	G	H	Applicable size
VHS20-D	28	42	17.5	40	**AC20-D**
VHS30-D	38	53	20	53	**AC30-D**
VHS40-D	52	71	29	70	**AC40-D**
VHS40-06-D	52	71	29	70	**AC40-06-D**
VHS50-D	72	90	33	90	**AC50-D/AC60-D**

Piping Adapter: 1/8, 1/4, 3/8, 1/2, 3/4, 1, 1 1/4, 1 1/2

· Using on the inlet side or the outlet side of F.R.L. units makes it easier to perform maintenance, as the component can be installed/removed without removing the piping.

E 300 – ☐ 03 – D

❶ ❷ ❸

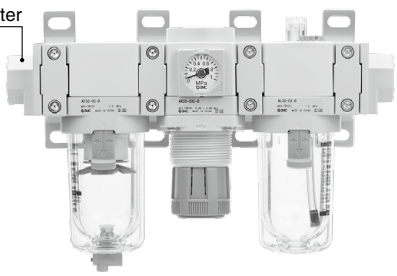

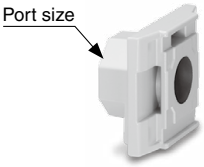

		Symbol	Description	❶ Body size [Applicable AC size] 200 [AC20]	300 [AC30]	400 [AC40]	500 [AC40-06]	600 [AC50, AC60]
❷	Pipe thread type	Nil	Rc	●	●	●	●	●
		N	NPT	●	●	●	●	●
		F	G	●	●	●	●	●
		+						
❸	Port size	01	1/8	●	—	—	—	—
		02	1/4	●	●	●	—	—
		03	3/8	●	●	●	—	—
		04	1/2	—	●	●	—	—
		06	3/4	—	—	●	●	●
		10	1	—	—	—	●	●
		12	1 1/4	—	—	—	—	●
		14	1 1/2	—	—	—	—	●

Standard Specifications

Fluid	Air
Ambient and fluid temperatures	–5 to 60°C (No freezing)
Proof pressure	1.5 MPa
Max. operating pressure	1.0 MPa

Dimensions

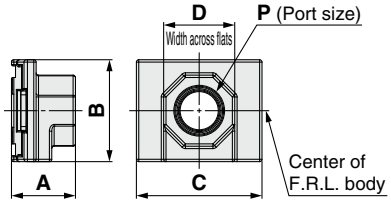

Model	P	A	B	C	D	Applicable AC size
E200-D	1/8, 1/4, 3/8	24	35	42	24	**AC20-D**
E300-D	1/4, 3/8, 1/2	27	43	53	30	**AC30-D**
E400-D	1/4, 3/8, 1/2, 3/4	30	51	71	36	**AC40-D**
E500-D	3/4	31	54	71	36	**AC40-06-D**
	1				46	
E600-D	3/4, 1	39	64	90	46	**AC50-D**
	1 1/4, 1 1/2	42			63	**AC60-D**

Caution on Mounting

Pipe threads are not provided on the face which connects with the other components. For use, a separate spacer (or spacer with bracket) is required.

L-Shaped Piping Adapter: 1/8, 1/4, 3/8, 1/2, 3/4, 1

- Upward/downward piping is possible on the inlet side and the outlet side of F.R.L. units.
- Ideal for space-saving and reducing piping labor
- Using on the inlet side or the outlet side of F.R.L. units makes it easier to perform maintenance, as the component can be installed/removed without removing the piping.

E 300 L – ☐ 03 – D

❶ ❷ ❸

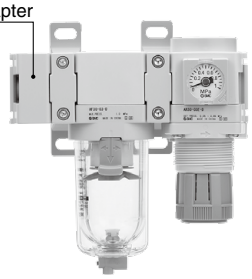

		Symbol	Description	❶ Body size [Applicable AC size] 200 [AC20]	300 [AC30]	400 [AC40]	500 [AC40-06]	600 [AC50, AC60]
❷	Pipe thread type	Nil	Rc	●	●	●	●	●
		N	NPT	●	●	●	●	●
		F	G	●	●	●	●	●
		+						
❸	Port size	01	1/8	●	●	—	—	—
		02	1/4	●	●	●	—	—
		03	3/8	—	●	●	—	—
		04	1/2	—	—	●	●	●
		06	3/4	—	—	—	●	●
		10	1	—	—	—	—	●

Standard Specifications

Fluid	Air
Ambient and fluid temperatures	–5 to 60°C (No freezing)
Proof pressure	1.5 MPa
Max. operating pressure	1.0 MPa

Dimensions

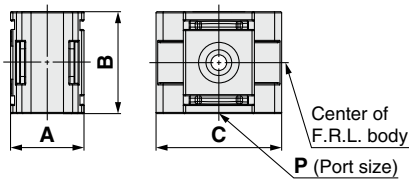

Model	P	A	B	C	Applicable AC size
E200L-D	1/8, 1/4	28	35	42	**AC20-D**
E300L-D	1/8, 1/4, 3/8	31	43	53	**AC30-D**
E400L-D	1/4, 3/8, 1/2	39	51	71	**AC40-D**
E500L-D	1/2, 3/4	47	54	71	**AC40-06-D**
E600L-D	1/2, 3/4, 1	62	64	90	**AC50-D** **AC60-D**

Caution on Mounting

Pipe threads are not provided on the face which connects with the other components. For use, a separate spacer (or spacer with bracket) is required.

T-Shaped Piping Adapter: 1/8, 1/4, 3/8, 1/2, 3/4, 1

- Both upward and downward piping are possible on the inlet and outlet sides of F.R.L. units.
- Ideal for space-saving and reducing piping labor
- Using on the inlet side or the outlet side of F.R.L. units makes it easier to perform maintenance, as the component can be installed/removed without removing the piping.

E 300 T – ☐ 03 – D

❶ ❷ ❸

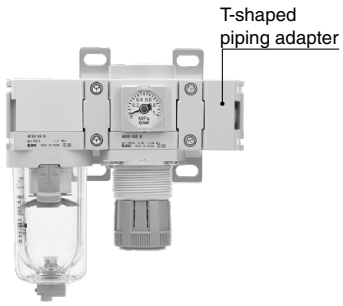

		Symbol	Description	❶ Body size [Applicable AC size] 200 [AC20]	300 [AC30]	400 [AC40]	500 [AC40-06]	600 [AC50, AC60]
❷	Pipe thread type	Nil	Rc	●	●	●	●	●
		N	NPT	●	●	●	●	●
		F	G	●	●	●	●	●
		+						
❸	Port size	01	1/8	●	●	—	—	—
		02	1/4	●	●	●	—	—
		03	3/8	—	●	●	—	—
		04	1/2	—	—	●	●	●
		06	3/4	—	—	—	●	●
		10	1	—	—	—	—	●

	Port size
IN	—
OUT	❸

Standard Specifications

Fluid	Air
Ambient and fluid temperatures	–5 to 60°C (No freezing)
Proof pressure	1.5 MPa
Max. operating pressure	1.0 MPa

Dimensions

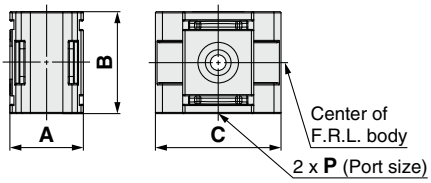

Model	P	A	B	C	Applicable AC size
E200T-D	1/8, 1/4	28	35	42	**AC20-D**
E300T-D	1/8, 1/4, 3/8	31	43	53	**AC30-D**
E400T-D	1/4, 3/8, 1/2	39	51	71	**AC40-D**
E500T-D	1/2, 3/4	47	54	71	**AC40-06-D**
E600T-D	1/2, 3/4, 1	62	64	90	**AC50-D** **AC60-D**

Caution on Mounting

Pipe threads are not provided on the face which connects with the other components. For use, a separate spacer (or spacer with bracket) is required.

T-Spacer: 1/8, 1/4, 3/8, 1/2, 3/4

· Using a T-spacer facilitates the branching of air flow.

Y 310 – □ 03 – □ – D

❶ ❷ ❸ ❹

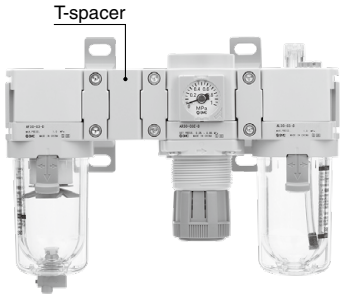

		Symbol	Description	❶ Body size [Applicable AC size]				
				210 [AC20]	310 [AC30]	410 [AC40]	510 [AC40-06]	610 [AC50, AC60]
❷	Pipe thread type	Nil	Rc	●	●	●	●	●
		N	NPT	●	●	●	●	●
		F	G	●	●	●	●	●
		+						
❸	Port size (OUT①)	01	1/8	●	●	—	—	—
		02	1/4	●	●	●	●	—
		03	3/8	—	○*1	●	●	●
		04	1/2	—	—	○*1	○*1	●
		06	3/4	—	—	—	○*1	○*1
		+						
❹ Semi-standard	Body type	Nil	Standard	●	●	●	●	●
		1	Slim	●	●	●	●	●

*1 ○: Only applicable to the standard type body

Body type: Standard (Y□-□□-D)

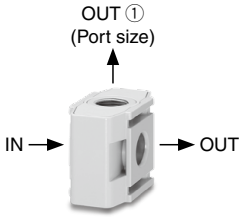

	Port size
IN	—
OUT	—
OUT ①	❸

Body type: Slim (Y□-□□-1-D)

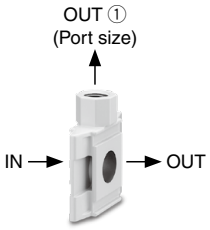

	Port size
IN	—
OUT	—
OUT ①	❸

Standard Specifications

Fluid	Air
Ambient and fluid temperatures	–5 to 60°C (No freezing)
Proof pressure	1.5 MPa
Max. operating pressure	1.0 MPa

Dimensions

Body type: Standard

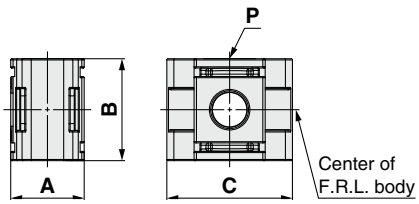

Model	P	A	B	C	Applicable AC size
Y210-D	1/8, 1/4	28	35	42	**AC20-D**
Y310-D	1/8, 1/4, 3/8	31	43	53	**AC30-D**
Y410-D	1/4, 3/8, 1/2	39	51	71	**AC40-D**
Y510-D	1/4, 3/8, 1/2, 3/4	47	54	71	**AC40-06-D**
Y610-D	3/8, 1/2, 3/4	62	64	90	**AC50-D, AC60-D**

Body type: Slim

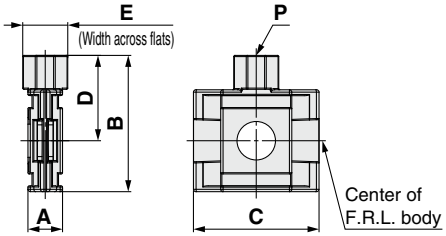

Model	P	A	B	C	D	E	Applicable AC size
Y210-1-D	1/8, 1/4	14.6	48.5	42	31	19	**AC20-D**
Y310-1-D	1/8, 1/4	14.6	57.5	53	36	19	**AC30-D**
Y410-1-D	1/4, 3/8	18.6	67	71	41.5	24	**AC40-D**
Y510-1-D	1/4, 3/8	18.6	70	63	43	24	**AC40-06-D**
Y610-1-D	3/8, 1/2	22	87	90	55	30	**AC50-D, AC60-D**

Caution on Mounting

· Pipe threads are not provided on the face which connects with the other components. For use, a separate spacer (or spacer with bracket) is required.
· The backflow of oil may occur when a spacer is used on the inlet side of the lubricator. Attach a check valve between the lubricator and the product to prevent backflow.
· When the slim body type is to be mounted to a wall using a spacer with bracket, use a spacer on only one side.

Cross Spacer: 1/8, 1/4, 3/8, 1/2, 3/4

· The piping can be branched upward/downward (OUT ①) or forward/backward (OUT ②).

Y 34 – □ 03 – □ – D

❶ ❷ ❸ ❹

		Symbol	Description	❶ Body size [Applicable AC size] 24 [AC20]	34 [AC30]	44 [AC40]	54 [AC40-06]	64 [AC50, AC60]
❷	Pipe thread type	Nil	Rc	●	●	●	●	●
		N	NPT	●	●	●	●	●
		F	G	●	●	●	●	●
		+						
❸	Port size (OUT ①)	01	1/8	●	●	—	—	—
		02	1/4	●	●	●	○*3	—
		03	3/8	—	●	●	●	●
		04	1/2	—	—	●	●	●
		06	3/4	—	—	—	●	●
		+						
❹ Semi-standard	Body type	Nil	Standard*1	●	●	●	●	●
		1	Front and back port selectable type*2	●	●	●	●	—

*1 The front and back ports are for releasing pressure and only come in size 1/8, irrespective of the ❸ port size. The minimum port size is 1.4 mm.
*2 The front and back ports come in the same size as the ❸ port size.
*3 "○" indicates that only the standard body type is applicable.

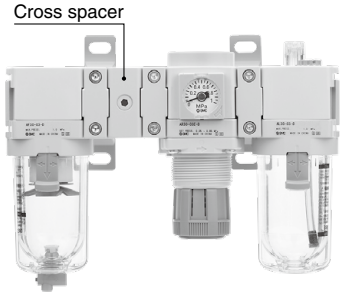

Body type: Standard (Y□-□□-D)

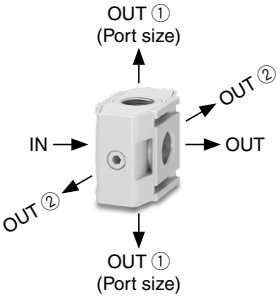

	Port size
IN	—
OUT	—
OUT ①	❸
OUT ②	1/8

Body type: Front and back port selectable (Y□-□□-1-D)

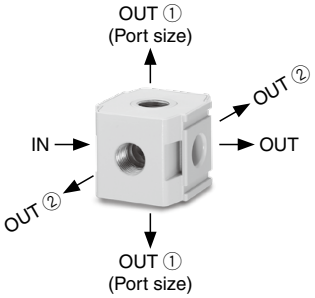

	Port size
IN	—
OUT	—
OUT ①	❸
OUT ②	❸

Standard Specifications

Fluid	Air
Ambient and fluid temperatures	–5 to 60°C (No freezing)
Proof pressure	1.5 MPa
Max. operating pressure	1.0 MPa

Dimensions

Body type: Standard

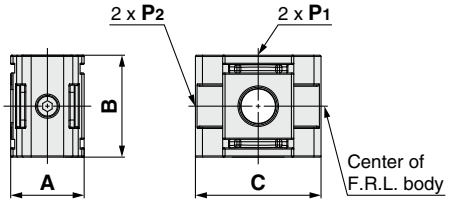

Model	P_1	P_2*1	A	B	C	Applicable AC size
Y24-D	1/8, 1/4	1/8	28	35	42	**AC20-D**
Y34-D	1/8, 1/4, 3/8	1/8	31	43	53	**AC30-D**
Y44-D	1/4, 3/8, 1/2	1/8	39	51	71	**AC40-D**
Y54-D	1/4, 3/8, 1/2, 3/4	1/8	47	54	71	**AC40-06-D**
Y64-D	3/8, 1/2, 3/4	1/8	62	64	90	**AC50-D, AC60-D**

*1 A resin plug is attached to the P_2 port and shipped together with the product.

Body type: Front and back port selectable

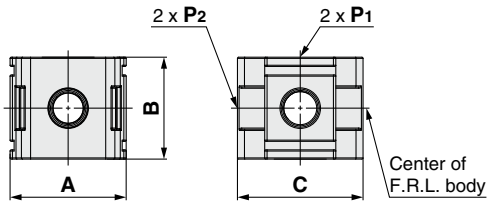

Model	P_1, P_2*1	A	B	C	Applicable AC size
Y24-1-D	1/8, 1/4	40	35	42	**AC20-D**
Y34-1-D	1/8, 1/4, 3/8	49	43	53	**AC30-D**
Y44-1-D	1/4, 3/8, 1/2	60	51	71	**AC40-D**
Y54-1-D	3/8, 1/2, 3/4	72	54	71	**AC40-06-D**

*1 Two hexagon socket head plugs the same size as the P_1 and P_2 ports are shipped together with the product.

Caution on Mounting

· Pipe threads are not provided on the face which connects with the other components. For use, a separate spacer (or spacer with bracket) is required.
· The backflow of oil may occur when a spacer is used on the inlet side of the lubricator. Attach a check valve between the lubricator and the product to prevent backflow.

Semi-standard Symbol Selection

· Select one each for **a** to **d**.
· When more than one specification is required, indicate in alphanumeric order.
Example) IS10M-30-6LP-D

Pressure Switch

· A compact, integrated pressure switch can be easily installed to facilitate the pressure detection of the line.

IS10M – 30 – □ – D

❶ ❷

Symbol

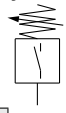

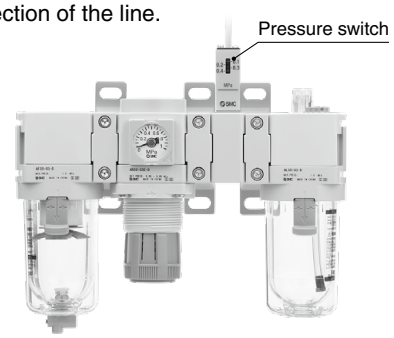

		Symbol	Description	❶ Body size [Applicable AC size] 20 [AC20]	30 [AC30]	40 [AC40]	50 [AC40-06]	60 [AC50, AC60]
❷ Semi-standard	a Body type	Nil	Standard	●	●	●	●	●
		1	Slim	●	●	●	●	●
		+						
	b Set pressure range	Nil	0.1 to 0.4 MPa	●	●	●	●	●
		6*1	0.1 to 0.6 MPa	●	●	●	●	●
		+						
	c Lead wire length	Nil	0.5 m	●	●	●	●	●
		L	3 m	●	●	●	●	●
		Z	5 m	●	●	●	●	●
		+						
	d Pressure unit of the scale plate	Nil	MPa	●	●	●	●	●
		P*2	MPa/psi dual scale	●	●	●	●	●

*1 The set pressure range for the 6P is 0.2 to 0.6 MPa (30 to 90 psi).
*2 This product is for overseas use only according to the New Measurement Act.
(The SI unit type is provided for use in Japan.)

Body type: Standard (IS10M-□□-D)

Body type: Slim (IS10M-□□-1-D)

Standard Specifications

Fluid	Air
Ambient and fluid temperatures	–5 to 60°C (No freezing)
Proof pressure	1.0 MPa
Max. operating pressure	0.7 MPa
Set pressure range (when OFF)	0.1 to 0.4 MPa
Hysteresis	0.08 MPa or less
Contact point configuration	1a

Switch Characteristics

Max. contact point capacity	2 VA (AC), 2 W (DC)
Operating voltage: AC, DC	100 V or less
Max. operating current	24 VAC, DC or less: 50 mA 48 VAC, DC or less: 40 mA 100 VAC, DC or less: 20 mA

* For detailed specifications of the IS10 series, refer to the IS10 series section on the SMC website: https://www.smcworld.com

Dimensions

Body type: Standard

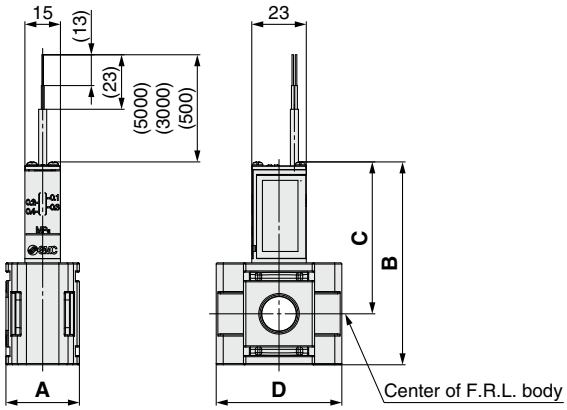

Model	A	B	C	D	Applicable AC size
IS10M-20-D	28	77.6	60.1	42	**AC20-D**
IS10M-30-D	31	85.6	64.1	53	**AC30-D**
IS10M-40-D	39	93.6	68.1	71	**AC40-D**
IS10M-50-D	47	96.6	69.6	71	**AC40-06-D**
IS10M-60-D	62	106.6	74.6	90	**AC50-D, AC60-D**

Body type: Slim

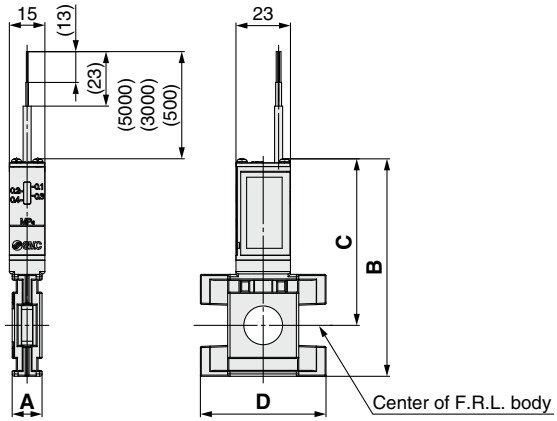

Model	A	B	C	D	Applicable AC size
IS10M-20-1-D	10.6	83.8	66.3	42	**AC20-D**
IS10M-30-1-D	12.6	91.8	70.3	53	**AC30-D**
IS10M-40-1-D	14.6	97.8	72.3	58.6	**AC40-D**
IS10M-50-1-D	16.6	100.8	73.8	59.3	**AC40-06-D**
IS10M-60-1-D	22	110.8	78.8	90	**AC50-D, AC60-D**

Caution on Mounting

· Pipe threads are not provided on the face which connects with the other components. For use, a separate spacer (or spacer with bracket) is required.
· When the slim body type is to be mounted to a wall using a spacer with bracket, use a spacer on only one side.

Semi-standard Symbol Selection

· Select one each for **a** to **c**.
· When more than one specification is required, indicate in alphanumeric order.
Example) IS10T-30-N03-6LP-D

Pressure Switch with T-Spacer

· A compact, integrated pressure switch can be easily installed to facilitate the pressure detection of the line.

IS10T – 30 – □ 03 – □ – D
❶ ❷ ❸ ❹

		Symbol	Description	❶ Body size [Applicable AC size] 20 [AC20]	30 [AC30]	40 [AC40]	50 [AC40-06]	60 [AC50, AC60]
❷	Pipe thread type	Nil	Rc	●	●	●	●	●
		N	NPT	●	●	●	●	●
		F	G	●	●	●	●	●
		+						
❸	Port size (OUT①)	01	1/8	●	●	—	—	—
		02	1/4	●	●	●	●	—
		03	3/8	—	●	●	●	●
		04	1/2	—	—	●	●	●
		06	3/4	—	—	—	●	●
		+						
❹ Semi-standard	a Set pressure range	Nil	0.1 to 0.4 MPa	●	●	●	●	●
		6*1	0.1 to 0.6 MPa	●	●	●	●	●
		+						
	b Lead wire length	Nil	0.5 m	●	●	●	●	●
		L	3 m	●	●	●	●	●
		Z	5 m	●	●	●	●	●
		+						
	c Pressure unit of the scale plate	Nil	MPa	●	●	●	●	●
		P*2	MPa/psi dual scale	●	●	●	●	●

*1 The set pressure range for the 6P is 0.2 to 0.6 MPa (30 to 90 psi).
*2 This product is for overseas use only according to the New Measurement Act. (The SI unit type is provided for use in Japan.)

Symbol

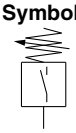

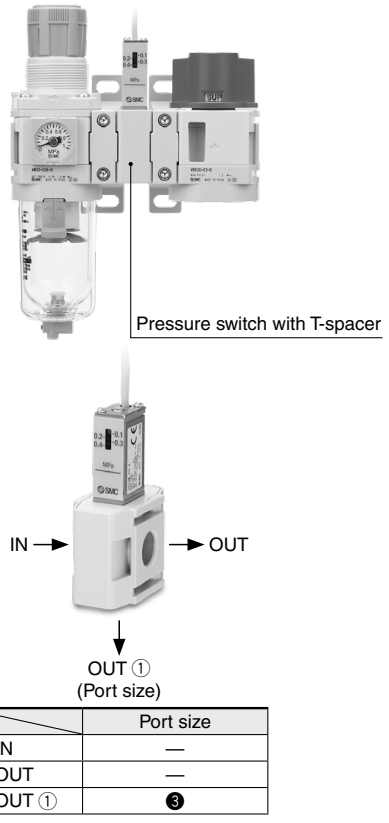

	Port size
IN	—
OUT	—
OUT ①	❸

Standard Specifications

Fluid	Air
Ambient and fluid temperatures	–5 to 60°C (No freezing)
Proof pressure	1.0 MPa
Max. operating pressure	0.7 MPa
Set pressure range (when OFF)	0.1 to 0.4 MPa
Hysteresis	0.08 MPa or less
Contact point configuration	1a

Switch Characteristics

Max. contact point capacity	2 VA (AC), 2 W (DC)
Operating voltage: AC, DC	100 V or less
Max. operating current	24 VAC, DC or less: 50 mA 48 VAC, DC or less: 40 mA 100 VAC, DC or less: 20 mA

* For detailed specifications of the IS10 series, refer to the IS10 series section on the SMC website: https://www.smcworld.com

Dimensions

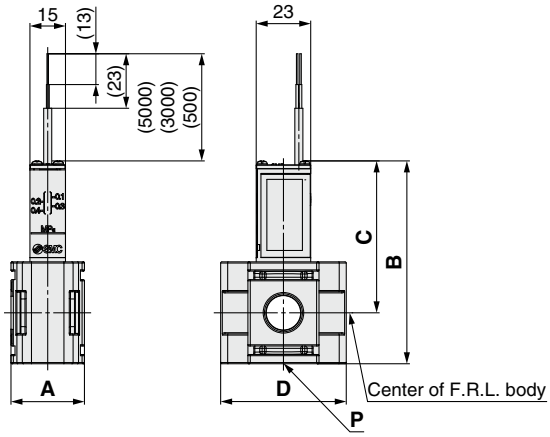

Model	P	A	B	C	D	Applicable AC size
IS10T-20-D	1/8, 1/4	28	77.6	60.1	42	**AC20-D**
IS10T-30-D	1/8, 1/4, 3/8	31	85.6	64.1	53	**AC30-D**
IS10T-40-D	1/4, 3/8, 1/2	39	93.6	68.1	71	**AC40-D**
IS10T-50-D	1/4, 3/8, 1/2, 3/4	47	96.6	69.6	71	**AC40-06-D**
IS10T-60-D	3/8, 1/2, 3/4	62	106.6	74.6	90	**AC50-D, AC60-D**

Caution on Mounting

· Pipe threads are not provided on the face which connects with the other components. For use, a separate spacer (or spacer with bracket) is required.
· The backflow of oil may occur when a spacer is used on the inlet side of the lubricator. Attach a check valve between the lubricator and the product to prevent backflow.

Semi-standard Symbol Selection

· Select one each for **a** to **d**.
· When more than one specification is required, indicate in alphanumeric order.
Example) IS10L-30-N03-6LP-D

Pressure Switch with L-Shaped Piping Adapter

· A compact, integrated pressure switch can be easily installed to facilitate the pressure detection of the line.
· Using on the inlet side or the outlet side of F.R.L. units allows the component to be installed/removed without removing the piping.

IS10L – 30 – □ 03 – □ – D

❶ ❷ ❸ ❹

		Symbol	Description	❶ Body size [Applicable AC size] 20 [AC20]	30 [AC30]	40 [AC40]	50 [AC40-06]	60 [AC50, AC60]
❷ Pipe thread type		Nil	Rc	●	●	●	●	●
		N	NPT	●	●	●	●	●
		F	G	●	●	●	●	●
+								
❸ Port size (OUT)		01	1/8	●	●	—	—	—
		02	1/4	●	●	●	—	—
		03	3/8	—	●	●	—	—
		04	1/2	—	—	●	●	●
		06	3/4	—	—	—	●	●
		10	1	—	—	—	—	●
+								
❹ Semi-standard	a Set pressure range	Nil	0.1 to 0.4 MPa	●	●	●	●	●
		6*1	0.1 to 0.6 MPa	●	●	●	●	●
+								
	b Lead wire length	Nil	0.5 m	●	●	●	●	●
		L	3 m	●	●	●	●	●
		Z	5 m	●	●	●	●	●
+								
	c Pressure unit of the scale plate	Nil	MPa	●	●	●	●	●
		P*2	MPa/psi dual scale	●	●	●	●	●
+								
	d Mounting position	Nil	Right	●	●	●	●	●
		R	Left	●	●	●	●	●

*1 The set pressure range for the 6P is 0.2 to 0.6 MPa (30 to 90 psi).
*2 This product is for overseas use only according to the New Measurement Act. (The SI unit type is provided for use in Japan.)

Symbol

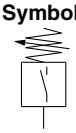

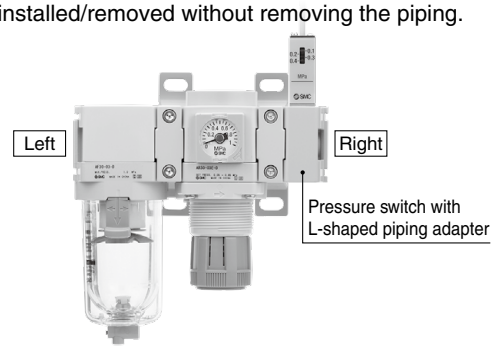

	Port size
IN	—
OUT	❸

Standard Specifications

Fluid	Air
Ambient and fluid temperatures	–5 to 60°C (No freezing)
Proof pressure	1.0 MPa
Max. operating pressure	0.7 MPa
Set pressure range (when OFF)	0.1 to 0.4 MPa
Hysteresis	0.08 MPa or less
Contact point configuration	1a

Switch Characteristics

Max. contact point capacity	2 VA (AC), 2 W (DC)
Operating voltage: AC, DC	100 V or less
Max. operating current	24 VAC, DC or less: 50 mA 48 VAC, DC or less: 40 mA 100 VAC, DC or less: 20 mA

* For detailed specifications of the IS10 series, refer to the IS10 series section on the SMC website: https://www.smcworld.com

Dimensions

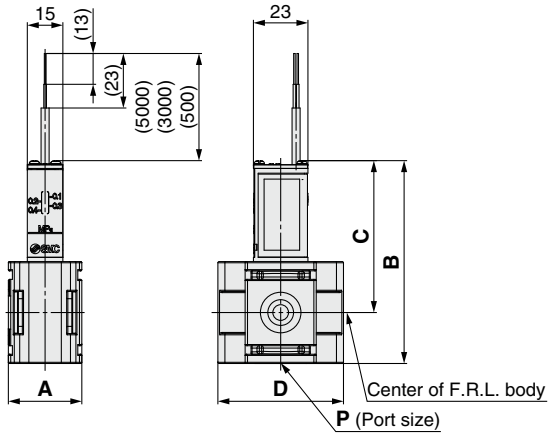

Model	P	A	B	C	D	Applicable AC size
IS10L-20-D	1/8, 1/4	28	77.6	60.1	42	**AC20-D**
IS10L-30-D	1/8, 1/4, 3/8	31	85.6	64.1	53	**AC30-D**
IS10L-40-D	1/4, 3/8, 1/2	39	93.6	68.1	71	**AC40-D**
IS10L-50-D	1/2, 3/4	47	96.6	69.6	71	**AC40-06-D**
IS10L-60-D	1/2, 3/4, 1	62	106.6	74.6	90	**AC50-D, AC60-D**

Caution on Mounting

Pipe threads are not provided on the face which connects with the other components. For use, a separate spacer (or spacer with bracket) is required.

Semi-standard Symbol Selection

· Select one each for **a** to **d**.
· When more than one specification is required, indicate in alphanumeric order.
Example) IS10E-30-N03-6LP-D

Pressure Switch with Piping Adapter

· A compact, integrated pressure switch can be easily installed to facilitate the pressure detection of the line.

IS10E – 30 – □ 03 – □ – D
❶ ❷ ❸ ❹

		Symbol	Description	❶ Body size [Applicable AC size] 20 [AC20]	30 [AC30]	40 [AC40]	50 [AC40-06]	60 [AC50, AC60]
❷	Pipe thread type	Nil	Rc	●	●	●	●	●
		N	NPT	●	●	●	●	●
		F	G	●	●	●	●	●
		+						
❸	Port size (OUT)	01	1/8	●	—	—	—	—
		02	1/4	●	●	●	—	—
		03	3/8	●	●	●	—	—
		04	1/2	—	●	●	—	—
		06	3/4	—	—	●	●	●
		10	1	—	—	—	●	●
		12	1 1/4	—	—	—	—	●
		14	1 1/2	—	—	—	—	●
		+						
❹ Semi-standard	a Set pressure range	Nil	0.1 to 0.4 MPa	●	●	●	●	●
		6*1	0.1 to 0.6 MPa	●	●	●	●	●
		+						
	b Lead wire length	Nil	0.5 m	●	●	●	●	●
		L	3 m	●	●	●	●	●
		Z	5 m	●	●	●	●	●
		+						
	c Pressure unit of the scale plate	Nil	MPa	●	●	●	●	●
		P*2	MPa/psi dual scale	●	●	●	●	●
		+						
	d Mounting position	Nil	Right	●	●	●	●	●
		R	Left	●	●	●	●	●

*1 The set pressure range for the 6P is 0.2 to 0.6 MPa (30 to 90 psi).
*2 This product is for overseas use only according to the New Measurement Act. (The SI unit type is provided for use in Japan.)

Symbol

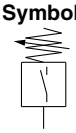

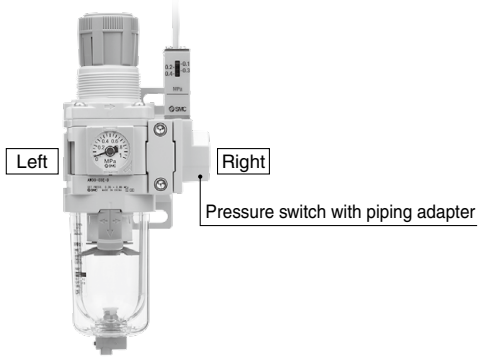

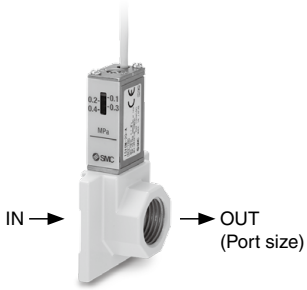

	Port size
IN	—
OUT	❸

Standard Specifications

Fluid	Air
Ambient and fluid temperatures	–5 to 60°C (No freezing)
Proof pressure	1.0 MPa
Max. operating pressure	0.7 MPa
Set pressure range (when OFF)	0.1 to 0.4 MPa
Hysteresis	0.08 MPa or less
Contact point configuration	1a

Switch Characteristics

Max. contact point capacity	2 VA (AC), 2 W (DC)
Operating voltage: AC, DC	100 V or less
Max. operating current	24 VAC, DC or less: 50 mA 48 VAC, DC or less: 40 mA 100 VAC, DC or less: 20 mA

* For detailed specifications of the IS10 series, refer to the IS10 series section on the SMC website: https://www.smcworld.com

Dimensions

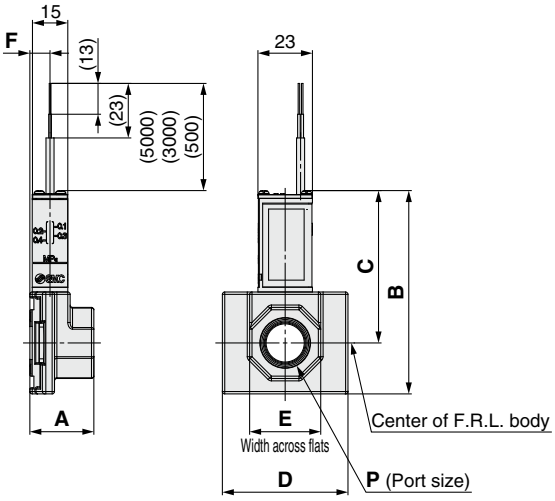

Model	P	A	B	C	D	E	F	Applicable AC size
IS10E-20-D	1/8, 1/4, 3/8	24	77.8	60.3	42	24	8.5	**AC20-D**
IS10E-30-D	1/4, 3/8, 1/2	27	85.8	64.3	53	30		**AC30-D**
IS10E-40-D	1/4, 3/8, 1/2, 3/4	30	93.8	68.3	71	36		**AC40-D**
IS10E-50-D	3/4	31	96.8	69.8	71	36		**AC40-06-D**
	1					46		
IS10E-60-D	3/4, 1	39	106.8	74.8	90	46	9.5	**AC50-D, AC60-D**
	1 1/4, 1 1/2	42				63		

Caution on Mounting

Pipe threads are not provided on the face which connects with the other components. For use, a separate spacer (or spacer with bracket) is required.

Right Angle Adapter

· Allows for modular connection with the product rotated 90 degrees

E 310 T – D

Body size • • **Right angle adapter**

210
310
410

Standard Specifications

Fluid	Air
Ambient and fluid temperatures	–5 to 60°C (No freezing)
Proof pressure	1.5 MPa
Max. operating pressure	1.0 MPa

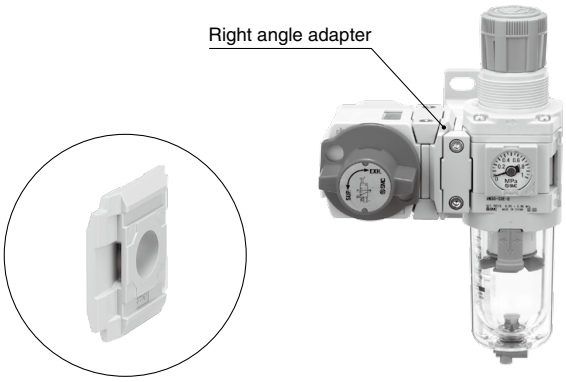

Dimensions

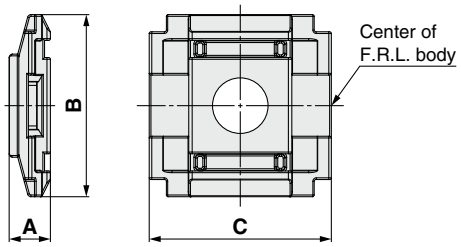

Model	A	B	C	Applicable AC size
E210T-D	9	42	42	**AC20-D**
E310T-D	12	53	53	**AC30-D**
E410T-D	15	71	71	**AC40-D**

Caution on Mounting

· Pipe threads are not provided on the face which connects with the other components. For use, a separate spacer (or spacer with bracket) is required.
· When mounting to a wall using a spacer with bracket, use a spacer on only one side.

Reducing Adapter

· Allows for modular connection with products 1 body size larger or smaller

E 310 R – D

• **Reducing adapter**

• **Body size**

310	For connecting sizes 20 and 30
410	For connecting sizes 30 and 40

Standard Specifications

Fluid	Air
Ambient and fluid temperatures	–5 to 60°C (No freezing)
Proof pressure	1.5 MPa
Max. operating pressure	1.0 MPa

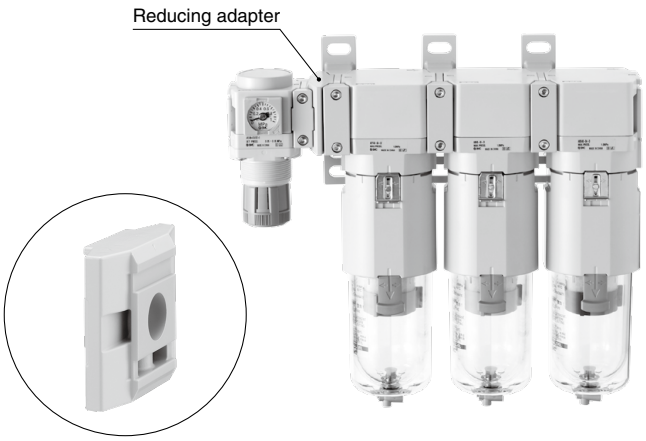

Dimensions

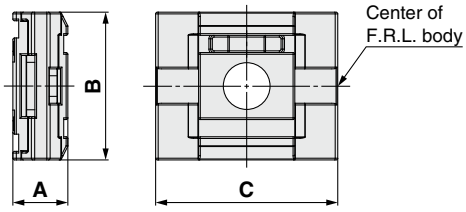

Model	A	B	C	Applicable AC size
E310R-D	16	43	53	**AC20-D, AC30-D**
E410R-D	20	51	71	**AC30-D, AC40-D**

Caution on Mounting

· Pipe threads are not provided on the face which connects with the other components. For use, a separate spacer (or spacer with bracket) is required.
· When mounting to a wall using a spacer with bracket, use a spacer on only one side.

Semi-standard Symbol Selection

· Select one each for **a** and **b**.
· When more than one specification is required, indicate in alphabetical order.
Example) Y34M-N03E-AZ-D

Cross Adapter: 1/4, 3/8, 1/2

· Allows for devices to be connected on the top, bottom, left, and right with a spacer

Y 34 M – □ 03 B – □ – D
❶ ❷ ❸ ❹ ❺

			Symbol	Description	❶ Body size [Applicable AC size] 24 [AC20]	34 [AC30]	44 [AC40]
❷	Pipe thread type		Nil	Rc	●	●	●
			N	NPT	●	●	●
			F	G	●	●	●
			+				
❸	Port size		02	1/4	●	—	—
			03	3/8	—	●	—
			04	1/2	—	—	●
			+				
❹	Option	Pressure gauge	B	Without pressure gauge (Double-sided blanking plate)	●	●	●
			E	Square embedded type pressure gauge (with limit indicator)	●	●	●
			+				
❺	Semi-standard	a Top/bottom spacer mounting direction*1	Nil	Front to back mounting	●	●	●
			A	Left to right mounting	●	●	●
			+				
		b Unit	Nil	Pressure gauge in SI units: MPa	●	●	●
			Z*2	Pressure gauge: MPa/psi dual scale	○*3	○*3	○*3

*1 It is possible to change the mounting direction of the spacer (From front to back to left to right). For details on how to do so, refer to the operation manual.
*2 For the pipe thread type: NPT. This product is for overseas use only according to the New Measurement Act. (The SI unit type is provided for use in Japan.)
*3 ○: For the pipe thread type: NPT only

Top/bottom spacer mounting direction: Front to back mounting (Nil)

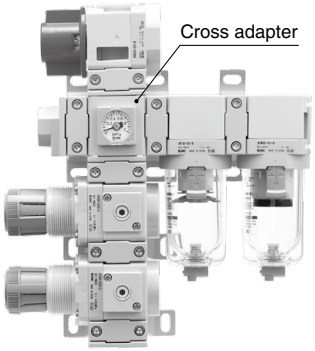

Connection example

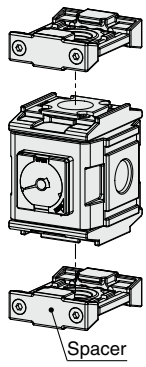

Top/bottom spacer mounting direction: Left to right mounting (A)

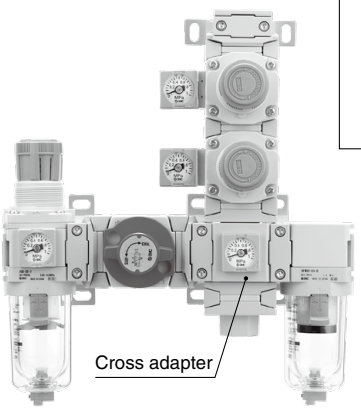

Connection example

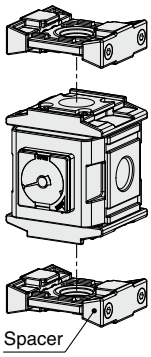

Standard Specifications

Fluid	Air
Ambient and fluid temperatures	–5 to 60°C (No freezing)
Proof pressure	1.5 MPa
Max. operating pressure	1.0 MPa

Caution on Mounting

· Pipe threads are not provided on the face which connects with the other components. For use, a separate spacer (or spacer with bracket) is required.
· The backflow of oil may occur when a spacer is used on the inlet side of the lubricator. Attach a check valve between the lubricator and the product to prevent backflow.

Dimensions

Top/bottom spacer mounting direction:
Front to back mounting

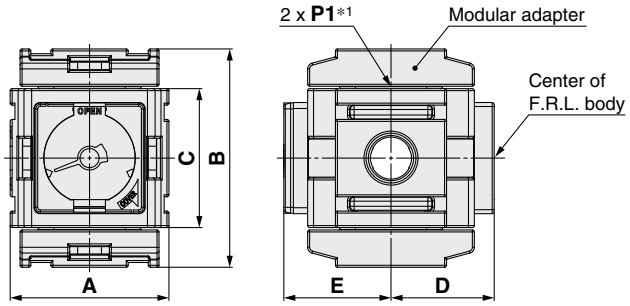

Top/bottom spacer mounting direction:
Left to right mounting

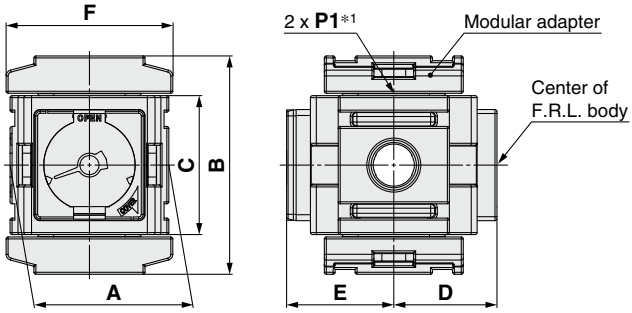

Model	Standard specifications					Optional specifications		Semi-standard specifications	Applicable AC size
						Without pressure gauge	Square embedded type pressure gauge	Spacer Left to right mounting	
	P1*1	A	B	C	D	E	E	F	
Y24M-D	1/4	40	55	35	26	26	27	42	AC20-D
Y34M-D	3/8	53	63	43	31.5	31.5	32.5	53	AC30-D
Y44M-D	1/2	70	77	51	40.5	40.5	41.5	71	AC40-D

*1 By removing the modular adapter, the female threads on the top and bottom surfaces can be used as piping ports for air release.

End Plate

· For blocking the unused piping ports on sides without a modular connection

E 300 E – D

- **End plate**
- **Body size**

200
300
400

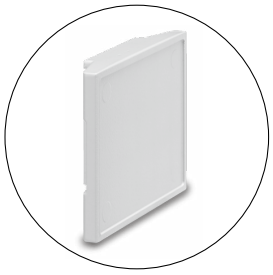

Standard Specifications

Fluid	Air
Ambient and fluid temperatures	–5 to 60°C (No freezing)
Proof pressure	1.5 MPa
Max. operating pressure	1.0 MPa

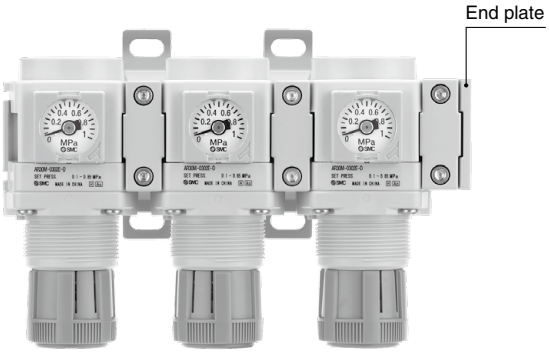

Dimensions

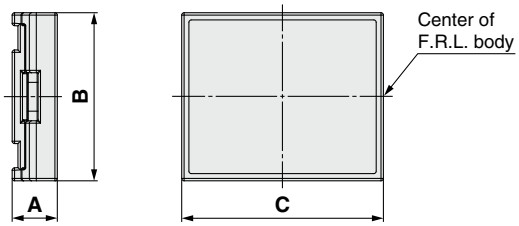

Model	A	B	C	Applicable AC size
E200E-D	9.4	35	42	**AC20-D**
E300E-D	9.4	43	53	**AC30-D**
E400E-D	12.4	51	71	**AC40-D**

Caution on Mounting

· Pipe threads are not provided on the face which connects with the other components. For use, a separate spacer (or spacer with bracket) is required.

AC-D Series
Specific Product Precautions

Be sure to read this before handling the products. Refer to the back cover for safety instructions. For F.R.L. units precautions, refer to the "Handling Precautions for SMC Products" and the "Operation Manual" on the SMC website: https://www.smcworld.com

Air Supply

⚠ Caution

1. Use an air filter with 5 μm or less filtration rating on the inlet side of the valve to avoid any damage to the seat caused by dust when mounting a pressure relief 3-port valve on the inlet side.

Mounting / Adjustment

⚠ Caution

1. When the bowl is installed on the air filter, filter regulator, lubricator, mist separator, or micro mist separator (AC30-D to AC60-D), install them so that the lock button lines up to the groove of the front (or the back) of the body to avoid drop or damage of the bowl.

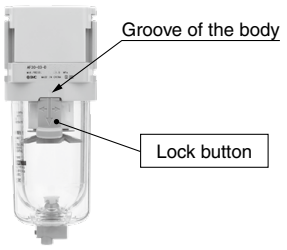

2. Tighten the 2 holding screws on the spacer with bracket or spacer evenly.
   Tighten them to the recommended tightening torque.
   Insufficient tightening torque may result in loosening or sealing failure. Excessive tightening torque may damage the thread, etc.

Recommended Torque Unit: N·m

Applicable model	AC20□	AC30□	AC40□	AC40□-06	AC50□ AC60□
Spacer with bracket part no.	Y200T-D	Y300T-D	Y400T-D	Y500T-D	Y600T-D
Spacer part no.	Y200-D	Y300-D	Y400-D	Y500-D	Y600-D
Torque	0.36 ±0.036	1.2 ±0.05	1.2 ±0.05	1.4 ±0.05	2.0 ±0.1

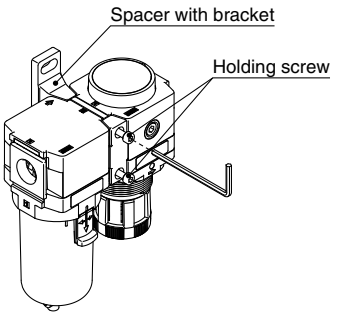

Selection

⚠ Warning

1. Piping load and moment
   Avoid any torsional or bending moments other than those caused by the equipment's own weight as failure to do so may result in damage.
   Support external piping separately. If moment application is unavoidable during operation, the moment should be lower than the max. moment shown below.
   Piping materials without flexibility, such as steel tube piping, are prone to being affected by excess moment loads or vibrations from the piping side. Use flexible tubing in between to avoid such effects.

Unit: N·m

Applicable model	AC20□	AC30□	AC40□	AC40□-06	AC50□ AC60□
Max. moment (**M**)	14.5	16	19.5	35	45

Max. moment (**M**) = Length (**L**) x Load (**F**)

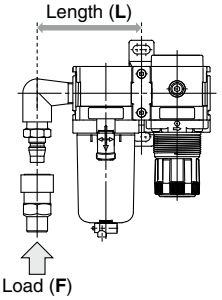

2. Float type auto drain
   Operate under the following conditions to avoid a malfunction.
   <N.O. type>
   - Operating compressor: 0.75 kW (100 L/min (ANR)) or more
     When using 2 or more auto drains, multiply the value above by the number of auto drains to find the capacity of the compressors you will need.
     For example, when using 2 auto drains, 1.5 kW (200 L/min (ANR)) of the compressor capacity is required.
   - Operating pressure: 0.1 MPa or more

   <N.C. type>
   - Operating pressure for AD27-D: 0.1 MPa or more
     Operating pressure for AD37-D/AD47-D: 0.15 MPa or more
3. Use a regulator or filter regulator with backflow function when mounting a pressure relief 3-port valve on the inlet side to ensure the release of the residual pressure. Otherwise, residual pressure will not be fully released.

⚠ Caution

1. When releasing air at the intermediate position using a T-spacer on the inlet side of the lubricator, lubricant may backflow. Therefore, releasing air that does not contain traces of lubricant is not possible. To release air that does not contain traces of lubricant, use a check valve (AKM series) on the inlet side of the lubricator to prevent a backflow of the lubricant.
2. If a pressure relief 3-port valve is mounted on the inlet side of the lubricator, causing a backflow of air, it can result in a backflow of oil or damage to internal parts. Do not use it in this manner.
3. An F.R.L. unit shipped from the plant has its model number labeled. However, components that are combined together during the distribution process do not have a label on them.
4. When operating at an inlet pressure lower than the inlet pressure used in the flow rate characteristics graph, the pressure drop on the outlet side may be greater. Therefore, be sure to conduct testing using the actual equipment.
   For air combination selection, refer to the "Product Selection Guide."

Modular Type
Air Filter
AF Series

Air Filter AF Series	Model	Port size	Filtration [μm]	Options
	AF20-D	1/8, 1/4	5	Bracket Float type auto drain
	AF30-D	1/4, 3/8		
	AF40-D	1/4, 3/8, 1/2		
	AF40-06-D	3/4		
	AF50-D	3/4, 1		
p. 74 to 83	**AF60-D**	1		

Air Filter
AF20-D to AF60-D

Symbol

Air Filter

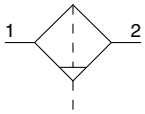

Air Filter with Auto Drain

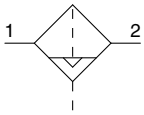

AF30-D

How to Order

AF 30 – ❷ 03 BD – ❺ –D

❶ ❷ ❸ ❹ ❺

Option and Semi-standard Symbol Selection

- Select one each for **a** to **g**.
- When more than one specification is required, indicate in alphanumeric order.

Example) AF30-F03BD-2LR-D

			Symbol	Description	❶ Body size 20	30	40	50	60
❷	Pipe thread type		Nil	Rc	●	●	●	●	●
			N	NPT	●	●	●	●	●
			F	G	●	●	●	●	●
			+						
❸	Port size		01	1/8	●	—	—	—	—
			02	1/4	●	●	●	—	—
			03	3/8	—	●	●	—	—
			04	1/2	—	—	●	—	—
			06	3/4	—	—	●	●	—
			10	1	—	—	—	●	●
			+						
❹	Option	a Mounting	Nil	Without mounting option	●	●	●	●	●
			B*1	With bracket	●	●	●	●	●
			+						
		b Float type auto drain*2	Nil	Without auto drain	●	●	●	●	●
			C*3	N.C. (Normally closed) Drain port is closed when pressure is not applied.	●	●	●	●	●
			D*4	N.O. (Normally open) Drain port is open when pressure is not applied.	—	●	●	●	●
			+						
❺	Semi-standard	c Bowl*5	Nil	Polycarbonate bowl	●	●	●	●	●
			2	Metal bowl	●	●	●	●	●
			6	Nylon bowl	●	●	●	●	●
			8	Metal bowl with level gauge	—	●	●	●	●
			C	With bowl guard	●	—*6	—*6	—*6	—*6
			6C	With bowl guard (Nylon bowl)	●	—*7	—*7	—*7	—*7
			+						
		d Indicator	Nil	Without indicator	●	●	●	●	●
			L	With element service indicator*14	●	●	●*12	●	●
			+						
		e Drain port*8	Nil	With drain cock	●	●	●	●	●
			J*9	Drain guide 1/8	●	—	—	—	—
				Drain guide 1/4	—	●	●	●	●
			W*10	Drain cock with barb fitting	—	●	●	●	●
			+						
		f Flow direction	Nil	Flow direction: Left to right	●	●	●	●	●
			R	Flow direction: Right to left	●	●	●	●	●
			+						
		g Unit	Nil	Unit on product label: MPa, °C	●	●	●	●	●
			Z*11	Unit on product label: psi, °F	○*13	○*13	○*13	○*13	○*13

*1 Option B is included in the package with the product but does not come assembled. The assembly consists of 2 types of the bracket and 2 mounting screws.
*2 The auto drain port is ø10 One-touch fitting (❷ Pipe thread type: Rc, G) or ø3/8" One-touch fitting (❷ Pipe thread type: NPT)
*3 When pressure is not applied, condensate which does not start the auto drain mechanism will be left in the bowl. Releasing the residual condensate before ending operations for the day is recommended.
*4 If the compressor is small (0.75 kW, discharge flow is less than 100 L/min (ANR)), air leakage from the drain cock may occur during the start of operations. N.C. type is recommended.
*5 Refer to chemical data on page 83 for chemical resistance of the bowl.
*6 A bowl guard is provided as standard equipment (polycarbonate).
*7 A bowl guard is provided as standard equipment (nylon).
*8 The combination of float type auto drain C and D is not available.
*9 Without a valve function. The mounting screws are the same as the thread of ❷.
*10 The combination of metal bowl 2 and 8 is not available.
*11 For the pipe thread type: NPT. This product is for overseas use only according to the New Measurement Act. (The SI unit type is provided for use in Japan.)
*12 Excludes port size "06"
*13 ○: For the pipe thread type: NPT only
*14 A special body type is required to mount the element service indicator. It cannot be mounted on a standard body.

AF20-D to AF60-D Series

Standard Specifications

Model		AF20-D	AF30-D	AF40-D	AF40-06-D	AF50-D	AF60-D
Port size		1/8, 1/4	1/4, 3/8	1/4, 3/8, 1/2	3/4	3/4, 1	1
Fluid		Air					
Ambient and fluid temperatures		–5 to 60°C (No freezing)					
Proof pressure		1.5 MPa					
Max. operating pressure		1.0 MPa					
Auto drain minimum operating pressure	**N.C.**	0.1 MPa	0.15 MPa				
	N.O.	—	0.1 MPa				
Nominal filtration rating∗1		5 µm					
Compressed air purity class∗2		ISO 8573-1:2010 [6 : 8 : 4]∗3					
Drain capacity		8 cm^3	25 cm^3	45 cm^3			
Bowl material		Polycarbonate					
Bowl guard		Semi-standard (Steel)	Standard (Polycarbonate)				
Weight		0.09 kg	0.17 kg	0.35 kg	0.39 kg	0.85 kg	0.92 kg

∗1 For the following conditions in accordance with [Test condition: ISO 8573-4:2001 compliant, Test method ISO 12500-3:2009 compliant]
Conditions: When a new element is used, and the flow capacity, inlet pressure, and the amount of solid bodies on the filter inlet side are stable
∗2 The compressed air purity class is indicated based on ISO 8573-1:2010 Compressed air – Part 1: Contaminants and purity classes.
For details on this standard, refer to page 131.
∗3 The compressed air quality class on the inlet side is [7 : 9 : 4].

Bowl Assembly/Part Nos.

Bowl material	Drain discharge mechanism	Drain port	Other	Model					
				AF20-D	**AF30-D**	**AF40-D**	**AF40-06-D**	**AF50-D**	**AF60-D**
Polycarbonate	Manual	With drain cock	—	C2SF-D	—	—			
			With bowl guard	C2SF-C-D	C3SF-D	C4SF-D			
		Drain cock with barb fitting	With bowl guard	—	C3SF-W-D	C4SF-W-D			
		With drain guide (without valve function)	—	C2SF□-J-D	—	—			
			With bowl guard	C2SF□-CJ-D	C3SF□-J-D	C4SF□-J-D			
	Automatic (Auto drain)	Normally closed (N.C.)	—	AD27-D	—	—			
			With bowl guard	AD27-C-D	AD37□-D	AD47□-D			
		Normally open (N.O.)	With bowl guard	—	AD38□-D	AD48□-D			
Nylon	Manual	With drain cock	—	C2SF-6-A	—	—			
			With bowl guard	C2SF-6C-A	C3SF-6-D	C4SF-6-D			
		Drain cock with barb fitting	With bowl guard	—	C3SF-6W-D	C4SF-6W-D			
		With drain guide (without valve function)	—	C2SF□-6J-A	—	—			
			With bowl guard	C2SF□-6CJ-A	C3SF□-6J-D	C4SF□-6J-D			
	Automatic (Auto drain)	Normally closed (N.C.)	—	AD27-6-A	—	—			
			With bowl guard	AD27-6C-A	AD37□-6-D	AD47□-6-D			
		Normally open (N.O.)	With bowl guard	—	AD38□-6-D	AD48□-6-D			
Metal	Manual	With drain cock	—	C2SF-2-A	C3SF-2-A	C4SF-2-A			
			With level gauge	—	C3LF-8-A	C4LF-8-A			
		With drain guide (without valve function)	—	C2SF□-2J-A	C3SF□-2J-A	C4SF□-2J-A			
			With level gauge	—	C3LF□-8J-A	C4LF□-8J-A			
	Automatic (Auto drain)	Normally closed (N.C.)	—	AD27-2-A	AD37□-2-A	AD47□-2-A			
			With level gauge	—	AD37□-8-A	AD47□-8-A			
		Normally open (N.O.)	—	—	AD38□-2-A	AD48□-2-A			
			With level gauge	—	AD38□-8-A	AD48□-8-A			

∗1 The bowl assembly comes with a bowl seal.
□ in bowl assembly part numbers indicates a pipe thread type (applicable tubing for auto drain).
No indication is necessary for Rc thread; however, indicate N for NPT thread, and F for G thread (For auto drain, Nil: ø10, N: ø3/8").
Please contact SMC separately for psi and °F unit display specifications.

Option/Part Nos.

Optional specifications	Model					
	AF20-D	**AF30-D**	**AF40-D**	**AF40-06-D**	**AF50-D**	**AF60-D**
Bracket assembly∗1	AF24P-070AS	AF34P-070AS	AF44P-070AS	AF49P-070AS	AF54P-070AS	
Auto drain	Refer to "Bowl Assembly/Part Nos."					

∗1 The assembly consists of a bracket A/B and 2 mounting screws.

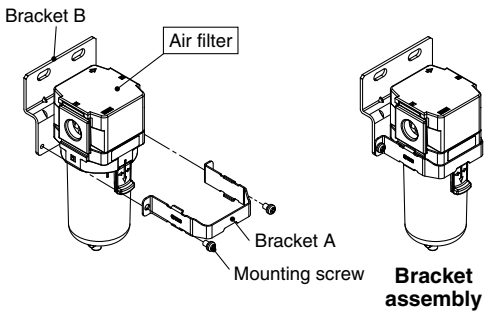

Replacement Parts

Description	Part no.					
	AF20-D	**AF30-D**	**AF40-D**	**AF40-06-D**	**AF50-D**	**AF60-D**
Filter element	AF20P-060S	AF30P-060S	AF40P-060S		AF50P-060S	AF60P-060S
Baffle	AF24P-040S	AF34P-040S	AF44P-040S		AF54P-040S	AF64P-040S
Bowl seal	C2SFP-260S	C32FP-260S	C42FP-260S			
Bowl assembly∗1, ∗2	Refer to "Bowl Assembly/Part Nos."					

∗1 The bowl assembly comes with a bowl seal.
∗2 Please contact SMC separately for psi and °F unit display specifications.

Flow Rate Characteristics (Representative values)

AF20-D

Rc1/4

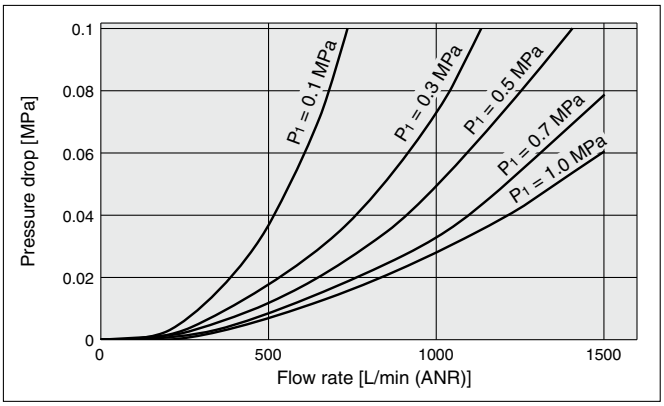

AF30-D

Rc3/8

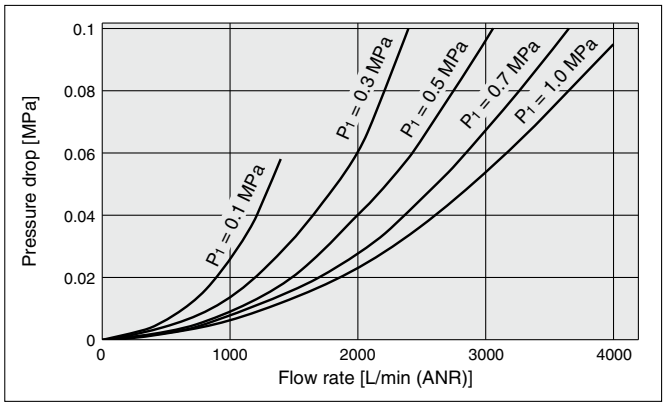

AF40-D

Rc1/2

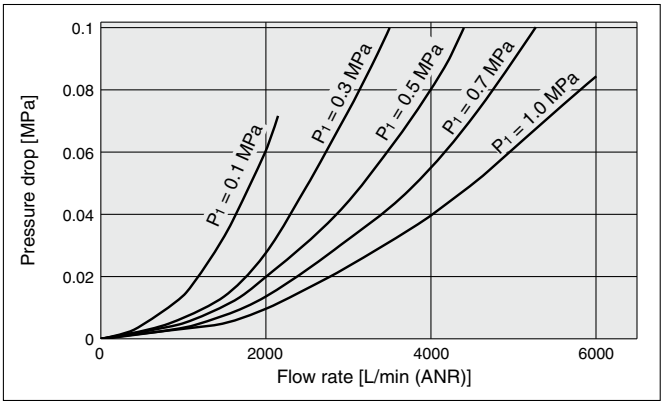

AF40-06-D

Rc3/4

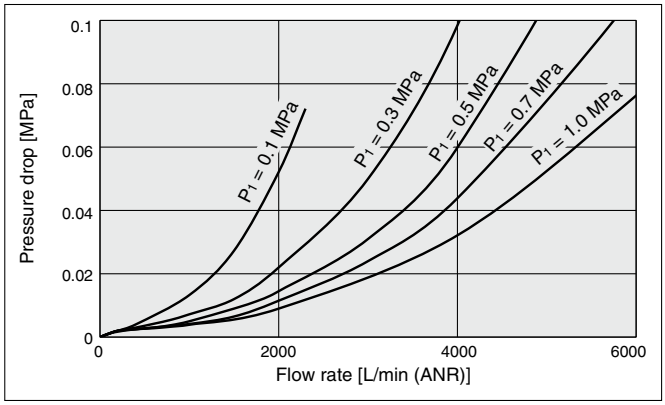

AF50-D

Rc1

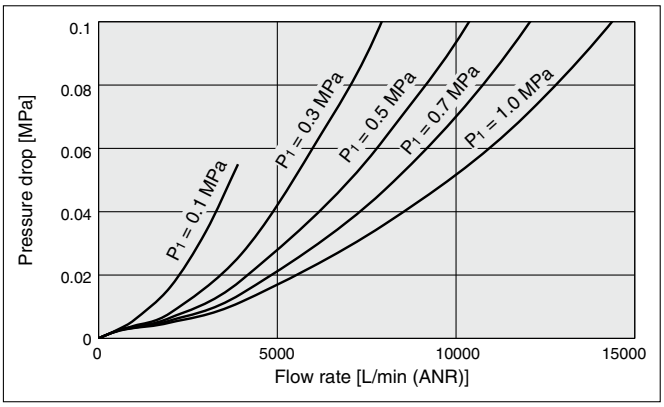

AF60-D

Rc1

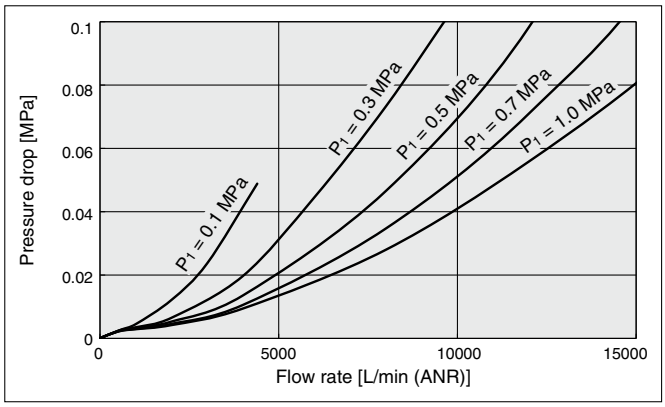

Working Principle: Float Type Auto Drain

N.O. type: AD38-D, AD48-D

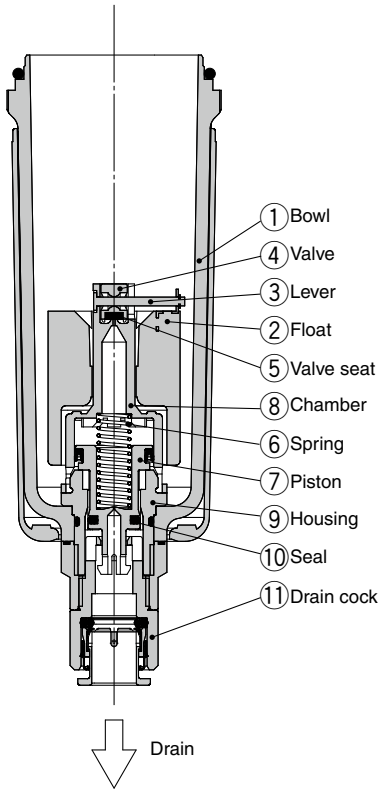

- **When pressure inside the bowl is released:**
  When pressure is released from the bowl ①, the piston ⑦ is lowered by the spring ⑥.
  The sealing action of the seal ⑩ is interrupted, and the outside air flows inside the bowl ① through the housing hole ⑨ and the drain cock ⑪.
  Therefore, if there is an accumulation of condensate in the bowl ①, it will drain out through the drain cock.
- **When pressure is applied inside the bowl:**
  When pressure is 0.1 MPa or more, the force of the piston ⑦ surpasses the force of the spring ⑥, and the piston goes up.
  This pushes seal ⑩ up so that it creates a seal, and the inside of the bowl ①, is shut off from the outside air.
  If there is no accumulation of condensate in the bowl ① at this time, the float ② will be pulled down by its own weight, causing the valve ④, which is connected to the lever ③, to seal the valve seat ⑤.
- **When there is an accumulation of condensate in the bowl:**
  The float ② rises due to its own buoyancy and the seal at the valve seat ⑤ is interrupted.
  This allows the pressure inside the bowl ① to enter the chamber ⑧. The result is that the combined pressure inside the chamber ⑧ and the force of the spring ⑥ lowers the piston ⑦.
  This causes the sealing action of the seal ⑩ to be interrupted, and the accumulated condensate in the bowl ① drains out through the drain cock ⑪.
  Turning the drain cock ⑪ manually counterclockwise lowers the piston ⑦, and causes the seal created by the seal ⑩ to be interrupted, thus allowing the condensate to drain out.

N.C. type: AD37-D, AD47-D

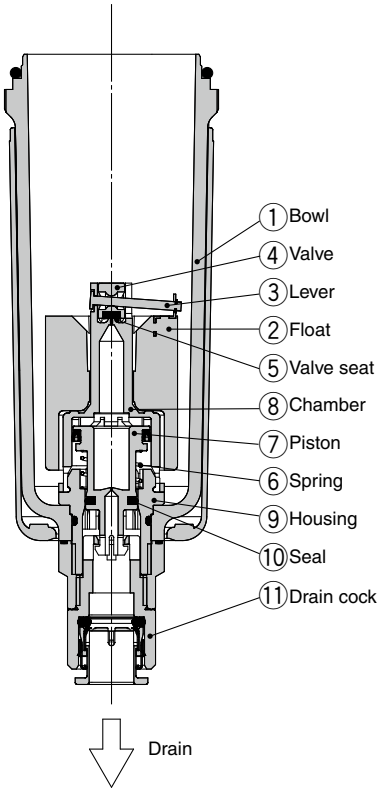

- **When pressure inside the bowl is released:**
  Even when pressure inside the bowl ① is released, spring ⑥ keeps the piston ⑦ in its upward position.
  This keeps the seal created by the seal ⑩ in place; thus, the inside of the bowl ① is shut off from the outside air.
  Therefore, even if there is an accumulation of condensate in the bowl ①, it will not drain out.
- **When pressure is applied inside the bowl:**
  Even when pressure is applied inside the bowl ①, the combined force of the spring ⑥ and the pressure inside the bowl ① keeps the piston ⑦ in its upward position.
  This maintains the seal created by the seal ⑩ in place; thus, the inside of the bowl ① is shut off from the outside air.
  If there is no accumulation of condensate in the bowl ① at this time, the float ② will be pulled down by its own weight, causing the valve ④, which is connected to the lever ③, to seal the valve seat ⑤.
- **When there is an accumulation of condensate in the bowl:**
  The float ② rises due to its own buoyancy and the seal at the valve seat ⑤ is interrupted. This allows the pressure inside the bowl ① to enter the chamber ⑧.
  The result is that the pressure inside the chamber ⑧ surpasses the force of the spring ⑥ and pushes the piston ⑦ downward.
  This causes the sealing action of the seal ⑩ to be interrupted and the accumulated condensate in the bowl ① drains out through the drain cock ⑪.
  Turning the drain cock ⑪ manually counterclockwise lowers the piston ⑦, and causes the seal created by the seal ⑩ to be interrupted, thus allowing the condensate to drain out.

Compact auto drain N.C. type: AD27-D

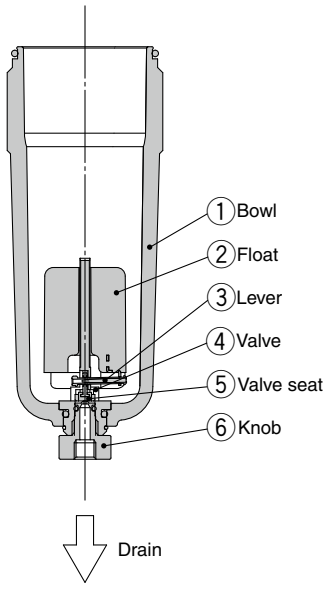

- **When pressure inside the bowl is released:**
  Even when pressure inside the bowl ① is released, the weight of the float ② causes the valve ④, which is connected to the lever ③, to seal the valve seat ⑤. As a result, the inside of the bowl ① is shut off from the outside air.
  Therefore, even if there is an accumulation of condensate in the bowl ①, it will not drain out.
- **When pressure is applied inside the bowl:**
  Even when pressure is applied inside the bowl ①, the weight of the float ② and the differential pressure that is applied to the valve ④ cause the valve ④ to seal the valve seat ⑤, and the outside air is shut off from the inside of the bowl ①.
- **When there is an accumulation of condensate in the bowl:**
  The float ② rises due to its own buoyancy and the seal at the valve seat ⑤ is interrupted.
  The condensate inside the bowl ① drains out through the knob ⑥.
  Turning the knob ⑥ manually counterclockwise lowers it and causes the sealing action of the valve seat ⑤ to be interrupted, which allows the condensate to drain out.

Operating State and Proper Use of Float Type Auto Drain

Auto drain	When pressure is not applied (After exhausting residual pressure)	When pressure is applied		Minimum operating pressure
		Before condensate accumulates	When condensate accumulates	
N.O. Normally open	Condensate discharged (Open) 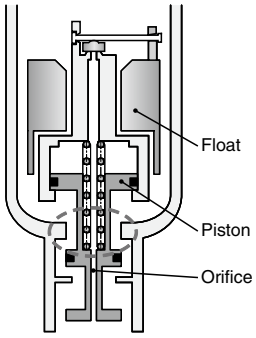	Condensate not discharged (Close) 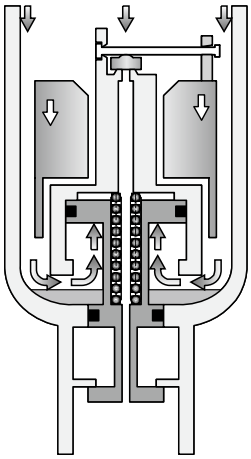	Condensate discharged (Open) 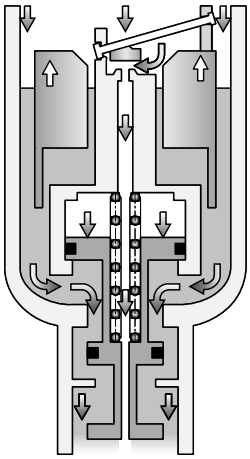	**0.1 MPa or more** AF30-D to AF60-D
N.C. Normally closed	Condensate not discharged (Close) 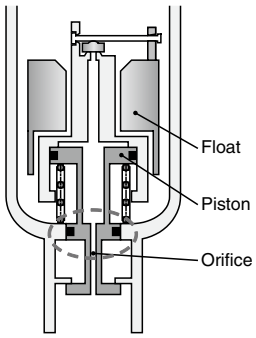			**0.1 MPa or more** AF20-D **0.15 MPa or more** AF30-D to AF60-D

◆ For both N.O. and N.C., the condensate can be discharged manually by turning the drain cock to the “O” position.

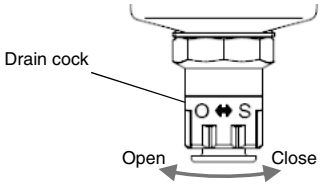

Proper Use			Recommended auto drain
Compressor	When pressure is not applied (After exhausting residual pressure)	Cold climates	
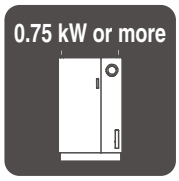	**Condensate not accumulated** Do not want to accumulate condensate generated at the inlet side when pressure is not applied.	**Want to prevent troubles caused by freezing.**	N.O.*1 Normally open
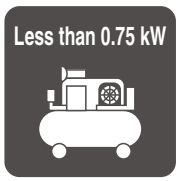	**Condensate accumulated**	—	N.C. Normally closed

*1 For N.O. (Normally open) type, the condensate discharge passage is open when pressure is not applied. For this reason, the drain port is not closed completely in a compressor with a small supply amount (less than 0.75 kW) and the air will ceaselessly blow out.

Dimensions

AF20-D

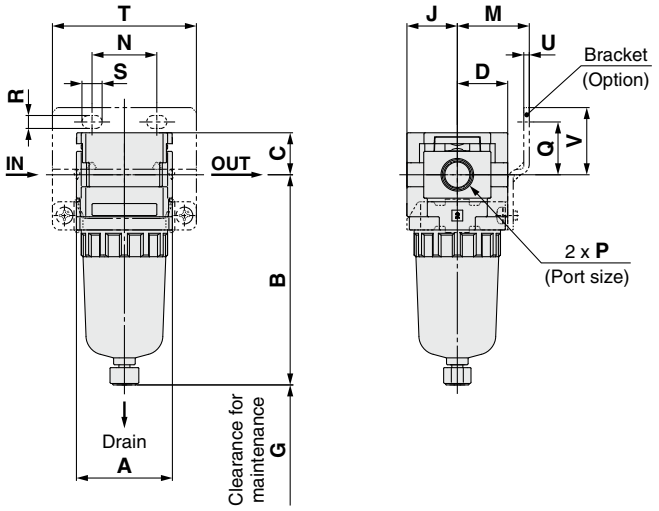

AF30-D to AF40-06-D

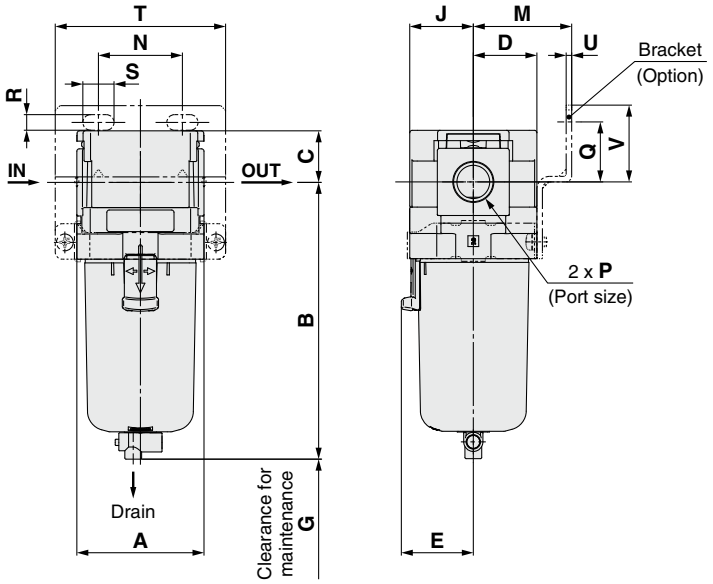

AF50-D to AF60-D

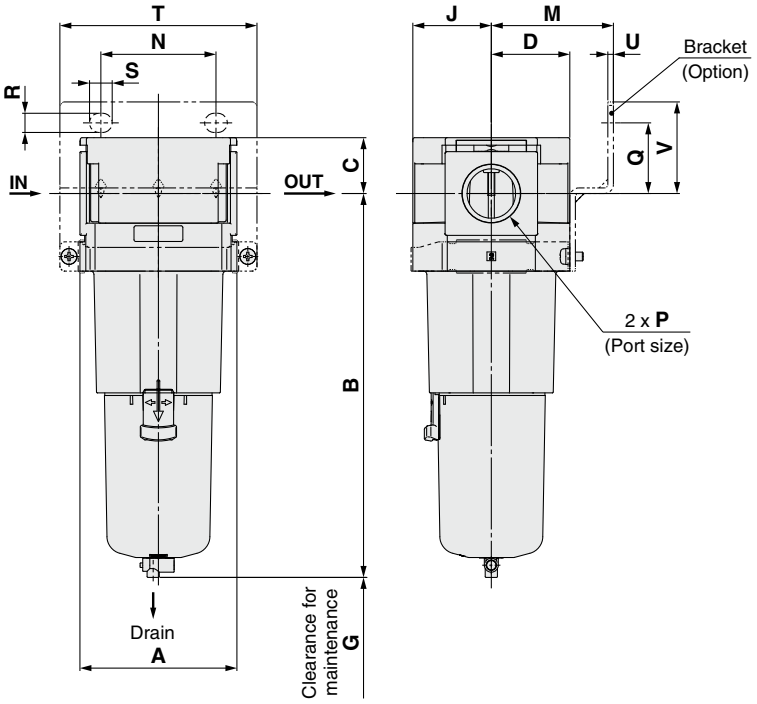

Applicable model	Optional specifications	Semi-standard						
	With auto drain	PC/PA bowl		Metal bowl		Metal bowl with level gauge		With element service indicator
		Drain cock with barb fitting	With drain guide	With drain cock	With drain guide	With drain cock	With drain guide	
AF20-D	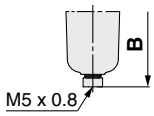		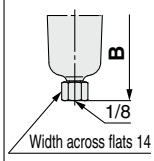	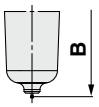	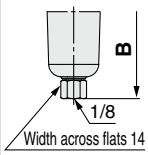			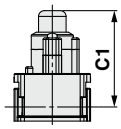
AF30-D to AF60-D	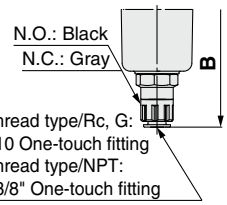	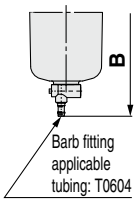	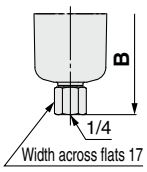	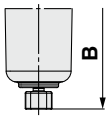	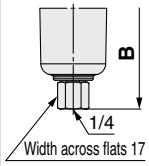	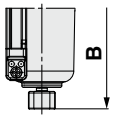	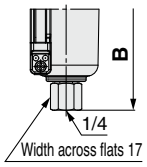	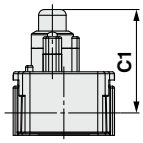

Model	Standard specifications								Optional specifications								
									Bracket mount								With auto drain
	P	**A**	**B**	**C**	**D**	**E**	**G**	**J**	**M**	**N**	**Q**	**R**	**S**	**T**	**U**	**V**	**B**
AF20-D	1/8, 1/4	40	87.6	17.5	21	—	25	21	30	27	22	5.4	8.4	60	2.3	28	104.9
AF30-D	1/4, 3/8	53	115.4	21.5	26.5	30	35	26.5	41	35	25	6.5	13	71	2.3	32	157.1
AF40-D	1/4, 3/8, 1/2	70	147.1	25.5	35.5	38.4	40	35.5	50	52	30	8.5	12.5	88	2.3	39	186.9
AF40-06-D	3/4	75	149.1	27	35.5	38.4	40	35.5	50	52	34	8.5	12.5	88	2.3	43	188.9
AF50-D	3/4, 1	90	220.1	32	45	—	30	45	70	66	40.5	11	13	113	3.2	52.5	259.9
AF60-D	1	95	234.1	32	45	—	30	45	70	66	40.5	11	13	113	3.2	52.5	273.9

Model	Semi-standard specifications							
	PC/PA bowl		Metal bowl		Metal bowl with level gauge		With element service indicator	
	With barb fitting	With drain guide	With drain cock	With drain guide	With drain cock	With drain guide		
	B	**B**	**B**	**B**	**B**	**B**	**A**	**C1**
AF20-D	—	91.4	87.4	93.9	—	—	40	50.6
AF30-D	123.9	122.2	117.8	122.3	137.8	142.3	53	54.3
AF40-D	155.6	153.9	149.5	154	169.5	174	70	58.3
AF40-06-D	157.6	155.9	151.5	156	171.5	176	—	—
AF50-D	228.6	226.9	222.5	227	242.5	247	90	64.3
AF60-D	242.6	240.9	236.5	241	256.5	261	90*1	64.3

*1 For the type with an element service indicator, the A dimension differs from that of the standard specification.

Air Filter/*AF20-D to AF60-D*

Made to Order

Please contact SMC for detailed dimensions, specifications, and lead times.

Made to Order

① Long Bowl

Drain capacity is greater than that of standard models.

Applicable Models/Drain Capacity

Model	AF20-D	AF30-D	AF40-D	AF40-06-D	AF50-D	AF60-D
Port size	1/8, 1/4	1/4, 3/8	1/4, 3/8, 1/2	3/4	3/4, 1	1
Drain capacity [cm³]	19	43	88			
B dimension [mm]∗1	108.1	137.4	167.2	169.2	240.2	254.2

∗1 For polycarbonate bowls. Please contact SMC for other bowl materials.

AF 30 - ☐ 03 ☐ - ☐ - D - X64

❶ ❷ ❸ ❹ ❺ — Long bowl

AF20-D **AF30 to 60-D**

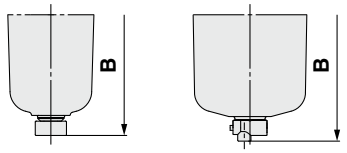

Semi-standard Symbol Selection

· Select one each for **a** to **d**.
· When more than one specification is required, indicate in alphanumeric order.
Example) AF30-F03B-2JR-D-X64

		Symbol	Description	❶ Body size 20	30	40	50	60
❷	Pipe thread type	**Nil**	Rc	●	●	●	●	●
		N	NPT	●	●	●	●	●
		F	G	●	●	●	●	●
		+						
❸	Port size	**01**	1/8	●	—	—	—	—
		02	1/4	●	●	●	—	—
		03	3/8	—	●	●	—	—
		04	1/2	—	—	●	—	—
		06	3/4	—	—	●	●	—
		10	1	—	—	—	●	●
		+						
❹	Option (Mounting)	**Nil**	Without mounting option	●	●	●	●	●
		B∗1	With bracket	●	●	●	●	●
		+						
❺ Semi-standard	**a** Bowl∗2	**Nil**	Polycarbonate bowl	●	●	●	●	●
		2	Metal bowl	●	●	●	●	●
		6	Nylon bowl	●	●	●	●	●
		C	With bowl guard	●	—∗3	—∗3	—∗3	—∗3
		6C	With bowl guard (Nylon bowl)	●	—∗4	—∗4	—∗4	—∗4
		+						
	b Drain port	**Nil**	With drain cock	●	●	●	●	●
		J∗5	Drain guide 1/8	●	—	—	—	—
			Drain guide 1/4	—	●	●	●	●
		W∗6	Drain cock with barb fitting	—	●	●	●	●
		+						
	c Flow direction	**Nil**	Flow direction: Left to right	●	●	●	●	●
		R	Flow direction: Right to left	●	●	●	●	●
		+						
	d Unit	**Nil**	Unit on product label: MPa, °C	●	●	●	●	●
		Z∗7	Unit on product label: psi, °F	○∗8	○∗8	○∗8	○∗8	○∗8

∗1 Option B is included in the package with the product but does not come assembled. The assembly consists of 2 types of the bracket and 2 mounting screws.
∗2 Refer to chemical data on page 83 for chemical resistance of the bowl.
∗3 A bowl guard is provided as standard equipment (polycarbonate).
∗4 A bowl guard is provided as standard equipment (nylon).
∗5 Without a valve function. The mounting screws are the same as the thread of ❷.
∗6 The combination of metal bowl 2 is not available.
∗7 For the pipe thread type: NPT. This product is for overseas use only according to the New Measurement Act. (The SI unit type is provided for use in Japan.)
∗8 ○: For the pipe thread type: NPT only

AF20-A to AF60-A Air Filter
Made to Order

Please contact SMC for detailed dimensions, specifications and lead times.

Made to Order

③ Special Temperature Environment

Special materials are used in the manufacturing of seals and resin parts to allow them to withstand various temperature conditions in cold or tropical (hot) climates.

Specifications

Made-to-order part no.		-X430	-X440
Environment		Low temperature	High temperature
Ambient temperature [°C]		–30 to 60	–5 to 80
Fluid temperature [°C]		–5 to 60 (with no freezing)	
Material	**Rubber parts**	Special NBR	FKM
	Main parts	Metal (Aluminum die-cast, etc.)	

Applicable Model

Model	AF30-A	AF40-A	AF40-06-A	AF50-A	AF60-A
Port size	1/4, 3/8	1/4, 3/8, 1/2	3/4	3/4, 1	1

AF 30 - ☐ 03 B - 2 ☐ - A - X430

❶ ❷ ❸ ❹ ❺ ❻

For high/low temperature

X430	Low temperature
X440	High temperature

- Semi-standard: Select one each for **a** to **c**.
- Semi-standard symbol: When more than one specification is required, indicate in alphabetic order.

Example) AF30-03B-2R-A-X430

		Symbol	Description	❶ Body size 30	40	50	60
❷	Pipe thread type	**Nil**	Rc	●	●	●	●
		N∗1	NPT	●	●	●	●
		F∗2	G	●	●	●	●
❸	Port size	**02**	1/4	●	●	—	—
		03	3/8	●	●	—	—
		04	1/2	—	●	—	—
		06	3/4	—	●	●	—
		10	1	—	—	●	●
❹	Option (Mounting)	**Nil**	Without mounting option	●	●	●	●
		B∗3	With bracket	●	●	●	●
❺	Bowl∗4	**2**	Metal bowl	●	●	●	●
❻ Semi-standard	a Drain port	**Nil**	With drain cock	●	●	●	●
		J∗5	Drain guide 1/4	●	●	●	●
	b Flow direction	**Nil**	Flow direction: Left to right	●	●	●	●
		R	Flow direction: Right to left	●	●	●	●
	c Pressure unit	**Nil**	Name plate and caution plate for bowl in SI units: MPa	●	●	●	●
		Z∗6	Name plate and caution plate for bowl in imperial units: psi, °F	○∗7	○∗7	○∗7	○∗7

∗1 Drain guide is NPT1/4.
∗2 Drain guide is G1/4.
∗3 A bracket is not assembled and supplied loose at the time of shipment. Including 2 mounting screws
∗4 Only metal bowl 2 is available.
∗5 Without a valve function
∗6 For pipe thread type: NPT. This product is for overseas use only according to the new Measurement Act. (The SI unit type is provided for use in Japan.)
∗7 ○: For pipe thread type: NPT only

④ High Pressure

Strong materials are used in the manufacturing of air filters intended for high pressure operation.

Specifications

Made-to-order part no.	-X425
Proof pressure [MPa]	3.0
Maximum operating pressure [MPa]	2.0
Ambient and fluid temperature [°C]	–5 to 60 (with no freezing)

Applicable Model

Model	AF20-A	AF30-A	AF40-A	AF40-06-A	AF50-A	AF60-A
Port size	1/8, 1/4	1/4, 3/8	1/4, 3/8, 1/2	3/4	3/4, 1	1

AF 30 - ☐ 03 B - 2 ☐ - A - X425

❶ ❷ ❸ ❹ ❺ ❻

For high pressure

- Semi-standard: Select one each for **a** to **c**.
- Semi-standard symbol: When more than one specification is required, indicate in alphabetic order.

Example) AF30-03B-2R-A-X425

		Symbol	Description	❶ Body size 20	30	40	50	60
❷	Pipe thread type	**Nil**	Rc	●	●	●	●	●
		N∗1	NPT	●	●	●	●	●
		F∗2	G	●	●	●	●	●
❸	Port size	**01**	1/8	●	—	—	—	—
		02	1/4	●	●	●	—	—
		03	3/8	—	●	●	—	—
		04	1/2	—	—	●	—	—
		06	3/4	—	—	●	●	—
		10	1	—	—	—	●	●
❹	Option (Mounting)	**Nil**	Without mounting option	●	●	●	●	●
		B∗3	With bracket	●	●	●	●	●
❺	Bowl∗4	**2**	Metal bowl	●	●	●	●	●
		8	Metal bowl with level gauge	—	●	●	●	●
❻ Semi-standard	a Drain port	**Nil**	With drain cock	●	●	●	●	●
		J∗5	Drain guide 1/8	●	—	—	—	—
			Drain guide 1/4	—	●	●	●	●
	b Flow direction	**Nil**	Flow direction: Left to right	●	●	●	●	●
		R	Flow direction: Right to left	●	●	●	●	●
	c Pressure unit	**Nil**	Name plate and caution plate for bowl in SI units: MPa	●	●	●	●	●
		Z∗6	Name plate and caution plate for bowl in imperial units: psi, °F	○∗7	○∗7	○∗7	○∗7	○∗7

∗1 Drain guide is NPT1/8 (applicable to the AF20-A) and NPT1/4 (applicable to the AF30-A to AF60-A).
∗2 Drain guide is G1/8 (applicable to the AF20-A) and G1/4 (applicable to the AF30-A to AF60-A).
∗3 A bracket is not assembled and supplied loose at the time of shipment. Including 2 mounting screws
∗4 Only metal bowl 2 and 8 are available.
∗5 Without a valve function
∗6 For pipe thread type: NPT. This product is for overseas use only according to the new Measurement Act. (The SI unit type is provided for use in Japan.)
∗7 ○: For pipe thread type: NPT only

Made to Order

Please contact SMC for detailed dimensions, specifications, and lead times.

② Clean Series

For details, refer to the Clean Series/Low Particle Generation section of the **Web Catalog**.

10 - Standard model no.

- **Clean Series**

③ Copper, Fluorine and Silicone-free + Low Particle Generation

For details, refer to the Clean Series/Low Particle Generation section of the **Web Catalog**.

21 - Standard model no.

- **Copper, fluorine and silicone-free + Low particle generation**

AF-D Series
Specific Product Precautions

Be sure to read this before handling the products. Refer to the back cover for safety instructions. For F.R.L. units precautions, refer to the "Handling Precautions for SMC Products" and the "Operation Manual" on the SMC website: https://www.smcworld.com

Design / Selection

⚠ Warning

1. The bowl material of the standard air filter is polycarbonate. Do not use in an environment where they are exposed to or come in contact with organic solvents, chemicals, cutting oil, synthetic oil, alkali, and thread lock solutions.

Chemical resistance of polycarbonate or nylon bowl

Type	Chemical name	Application examples	Material	
			Polycarbonate	Nylon
Acid	Hydrochloric acid Sulfuric acid Phosphoric acid Chromic acid	Acid washing liquid for metals	△	×
Alkaline	Sodium hydroxide (Caustic soda) Potash Calcium hydroxide (Slack lime) Ammonia water Sodium carbonate	Degreasing of metals Industrial salts Water-soluble cutting oil	×	○
Inorganic salts	Sodium sulfide Potassium nitrate Sodium sulfate	—	×	△
Chlorine solvents	Carbon tetrachloride Chloroform Ethylene chloride Methylene chloride	Cleansing liquid for metals Printing ink Dilution	×	△
Aromatic series	Benzene Toluene Paint thinner	Coatings Dry cleaning	×	△
Ketone	Acetone Methyl ethyl ketone Cyclohexane	Photographic film Dry cleaning Textile industries	×	×
Alcohol	Ethyl alcohol IPA Methyl alcohol	Antifreeze Adhesives	△	×
Oil	Gasoline Kerosene	—	×	○
Ester	Phthalic acid dimethyl Phthalic acid diethyl Acetic acid	Synthetic oil Anti-rust additives	×	○
Ether	Methyl ether Ethyl ether	Brake oil additives	×	○
Amino	Methyl amino	Cutting oil Brake oil additives Rubber accelerator	×	×
Others	Thread-lock fluid Seawater Leak tester	—	×	△

○: Essentially safe △: Some effects may occur. ×: Effects will occur.

∗ When the above factors are present, or there is some doubt, use a metal bowl for safety.
∗ The display window material for the semi-standard type with an element service indicator is nylon.

Maintenance

⚠ Warning

1. Replace the element every 2 years or when the differential pressure (pressure drop) becomes 0.1 MPa, whichever comes first, to prevent damage to the element.

Mounting / Adjustment

⚠ Caution

1. When the bowl is installed on the air filter (AF30-D to AF60-D), install them so that the lock button lines up to the groove of the front (or the back) of the body to avoid drop or damage of the bowl.

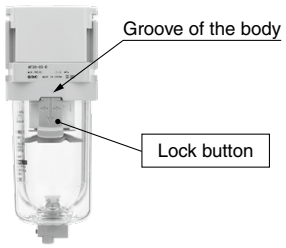

Handling

⚠ Caution

1. The element service indicator (Semi-standard: L) is used to check the pressure differential between the IN and OUT sides. When operating at a flow rate with a pressure differential exceeding 0.025 MPa, the element service indicator may operate even when the element is in its initial state.
2. For models with an element service indicator, adjust the flow rate in the direction that increases the flow rate.
   If the designated flow rate is exceeded, reset the flow rate to zero and readjust it until the designated flow rate is reached.
3. For models with an element service indicator, as the element becomes more clogged, the indicator will display an increasing level of red. Be sure to replace the element before the level of red reaches the top of the indicator.

Modular Type
Mist Separator/Micro Mist Separator
AFM/AFD Series

	Model	Port size	Filtration [μm]	Options
Mist Separator AFM Series **p. 85 to 91**	**AFM20-D**	1/8, 1/4	0.3	Bracket Float type auto drain
	AFM30-D	1/4, 3/8		
	AFM40-D	1/4, 3/8, 1/2		
	AFM40-06-D	3/4		
Micro Mist Separator AFD Series **p. 85 to 91**	**AFD20-D**	1/8, 1/4	0.01	Bracket Float type auto drain
	AFD30-D	1/4, 3/8		
	AFD40-D	1/4, 3/8, 1/2		
	AFD40-06-D	3/4		

Mist Separator
AFM20-D to AFM40-D
Micro Mist Separator
AFD20-D to AFD40-D

Symbol

Mist Separator

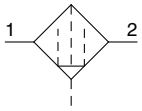

Micro Mist Separator

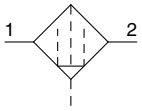

AFM30-D

AFD30-D

How to Order

AFM 30 – ☐ 03 BD – ☐ –D

AFD 30 – ☐ 03 BD – ☐ –D

❶ ❷ ❸ ❹ ❺

Option and Semi-standard Symbol Selection

- Select one each for **a** to **g**.
- When more than one specification is required, indicate in alphanumeric order.

Example) AFM30-F03BD-2LR-D

			Symbol	Description	❶ Body size 20	30	40
❷	Pipe thread type		**Nil**	Rc	●	●	●
			N	NPT	●	●	●
			F	G	●	●	●
			+				
❸	Port size		**01**	1/8	●	—	—
			02	1/4	●	●	●
			03	3/8	—	●	●
			04	1/2	—	—	●
			06	3/4	—	—	●
			+				
❹	Option	**a** Mounting	**Nil**	Without mounting option	●	●	●
			B∗1	With bracket	●	●	●
			+				
		b Float type auto drain∗2	**Nil**	Without auto drain	●	●	●
			C∗3	N.C. (Normally closed) Drain port is closed when pressure is not applied.	●	●	●
			D∗4	N.O. (Normally open) Drain port is open when pressure is not applied.	—	●	●
			+				
❺	Semi-standard	**c** Bowl∗5	**Nil**	Polycarbonate bowl	●	●	●
			2	Metal bowl	●	●	●
			6	Nylon bowl	●	●	●
			8	Metal bowl with level gauge	—	●	●
			C	With bowl guard	●	—∗6	—∗6
			6C	With bowl guard (Nylon bowl)	●	—∗7	—∗7
			+				
		d Indicator	**Nil**	Without indicator	●	●	●
			L	With element service indicator∗14, ∗15	●	●	●∗12
			M	With clogging switch (1 point)∗14, ∗16	●	●	●∗12
			MM	With clogging switch (2 points)∗14, ∗16	●	●	●∗12
			+				
		e Drain port∗8	**Nil**	With drain cock	●	●	●
			J∗9	Drain guide 1/8	●	—	—
				Drain guide 1/4	—	●	●
			W∗10	Drain cock with barb fitting	—	●	●
			+				
		f Flow direction	**Nil**	Flow direction: Left to right	●	●	●
			R	Flow direction: Right to left	●	●	●
			+				
		g Unit	**Nil**	Unit on product label: MPa, °C	●	●	●
			Z∗11	Unit on product label: psi, °F	○∗13	○∗13	○∗13

∗1 Option B is included in the package with the product but does not come assembled. The assembly consists of 2 types of the bracket and 2 mounting screws.
∗2 The auto drain port is ø10 One-touch fitting (❷ Pipe thread type: Rc, G) or ø3/8" One-touch fitting (❷ Pipe thread type: NPT)
∗3 When pressure is not applied, condensate which does not start the auto drain mechanism will be left in the bowl. Releasing the residual condensate before ending operations for the day is recommended.
∗4 If the compressor is small (0.75 kW, discharge flow is less than 100 L/min (ANR)), air leakage from the drain cock may occur during the start of operations. N.C. type is recommended.
∗5 Refer to chemical data on page 91 for chemical resistance of the bowl.
∗6 A bowl guard is provided as standard equipment (polycarbonate).
∗7 A bowl guard is provided as standard equipment (nylon).
∗8 The combination of float type auto drain C and D is not available.
∗9 Without a valve function. The mounting screws are the same as the thread of ❷.
∗10 The combination of metal bowl 2 and 8 is not available.
∗11 For the pipe thread type: NPT. This product is for overseas use only according to the New Measurement Act. (The SI unit type is provided for use in Japan.)
∗12 Excludes port size "06"
∗13 ○: For the pipe thread type: NPT only
∗14 A special body type is required to mount the element service indicator or clogging switch. It cannot be mounted on a standard body.
∗15 An auto switch cannot be installed with this option.
∗16 This option is equipped with a reed auto switch (model: D-A93VL). Refer to the auto switch catalog for the auto switch specifications.

Standard Specifications

Model			AFM20-D/AFD20-D	AFM30-D/AFD30-D	AFM40-D/AFD40-D	AFM40-06-D/AFD40-06-D
Port size			1/8, 1/4	1/4, 3/8	1/4, 3/8, 1/2	3/4
Fluid			Air			
Ambient and fluid temperatures			–5 to 60°C (No freezing)			
Proof pressure			1.5 MPa			
Max. operating pressure			1.0 MPa			
Min. operating pressure			0.05 MPa			
Auto drain minimum operating pressure	**N.C.**		0.1 MPa	0.15 MPa		
	N.O.		—	0.1 MPa		
Max. flow capacity∗1		**[AFM]**	200 L/min (ANR)	450 L/min (ANR)	1100 L/min (ANR)	
		[AFD]	120 L/min (ANR)	240 L/min (ANR)	600 L/min (ANR)	
Nominal filtration rating∗2		**[AFM]**	0.3 μm (Filtration efficiency: 99.9%)			
		[AFD]	0.01 μm (Filtration efficiency: 99.9%)			
Outlet side oil mist concentration∗3, ∗4		**[AFM]**	Max. 1.0 mg/m^3 (≈ 0.8 ppm)			
		[AFD]	Max. 0.1 mg/m^3 (Before saturated with oil 0.01 mg/m^3 or less ≈ 0.008 ppm)			
Compressed air purity class∗5		**[AFM]**	ISO 8573-1:2010 [3 : 7 : 3]∗6			
		[AFD]	ISO 8573-1:2010 [1 : 7 : 2]∗7			
Drain capacity			8 cm^3	25 cm^3	45 cm^3	
Bowl material			Polycarbonate			
Bowl guard			Semi-standard (Steel)	Standard (Polycarbonate)		
Weight			0.10 kg	0.18 kg	0.37 kg	0.40 kg

∗1 Inlet pressure: 0.7 MPa. Flow at 20°C, atmospheric pressure, and 65% of the relative humidity
The maximum flow capacity varies depending on the inlet pressure.
Keep the air flow within the maximum flow capacity to prevent an outflow of lubricant to the outlet side.
∗2 For the following conditions in accordance with [Test condition: ISO 8573-4:2001, Test method ISO 12500-3:2009 compliant] in addition to the conditions above
Conditions: When a new element is used, and the flow capacity, inlet pressure, and the amount of solid bodies on the filter inlet side are stable
∗3 The outlet side oil mist concentration for the following conditions in accordance with [Test condition: ISO 8573-2:2007, Test method ISO 12500-1:2007 compliant] in addition to the conditions above
Conditions: When a new element is used, the oil mist concentration on the filter inlet side is 10 mg/m^3, and the flow capacity, inlet pressure, and the oil mist concentration on the filter inlet side are stable
∗4 The bowl seal and other O-rings are slightly lubricated.
∗5 The compressed air purity class is indicated based on ISO 8573-1:2010 Compressed air – Part 1: Contaminants and purity classes.
For details on this standard, refer to page 131.
∗6 The compressed air quality class on the inlet side is [6 : 8 : 4].
∗7 The compressed air quality class on the inlet side is [3 : 7 : 3].

Bowl Assembly/Part Nos.

Bowl material	Drain discharge mechanism	Drain port	Other	Model			
				AFM20-D/AFD20-D	**AFM30-D/AFD30-D**	**AFM40-D/AFD40-D**	**AFM40-06-D/AFD40-06-D**
Polycarbonate	Manual	With drain cock	—	C2SF-D	—	—	
			With bowl guard	C2SF-C-D	C3SF-D	C4SF-D	
		Drain cock with barb fitting	With bowl guard	—	C3SF-W-D	C4SF-W-D	
		With drain guide (without valve function)	—	C2SF□-J-D	—	—	
			With bowl guard	C2SF□-CJ-D	C3SF□-J-D	C4SF□-J-D	
	Automatic (Auto drain)	Normally closed (N.C.)	—	AD27-D	—	—	
			With bowl guard	AD27-C-D	AD37□-D	AD47□-D	
		Normally open (N.O.)	With bowl guard	—	AD38□-D	AD48□-D	
Nylon	Manual	With drain cock	—	C2SF-6-A	—	—	
			With bowl guard	C2SF-6C-A	C3SF-6-D	C4SF-6-D	
		Drain cock with barb fitting	With bowl guard	—	C3SF-6W-D	C4SF-6W-D	
		With drain guide (without valve function)	—	C2SF□-6J-A	—	—	
			With bowl guard	C2SF□-6CJ-A	C3SF□-6J-D	C4SF□-6J-D	
	Automatic (Auto drain)	Normally closed (N.C.)	—	AD27-6-A	—	—	
			With bowl guard	AD27-6C-A	AD37□-6-D	AD47□-6-D	
		Normally open (N.O.)	With bowl guard	—	AD38□-6-D	AD48□-6-D	
Metal	Manual	With drain cock	—	C2SF-2-A	C3SF-2-A	C4SF-2-A	
			With level gauge	—	C3LF-8-A	C4LF-8-A	
		With drain guide (without valve function)	—	C2SF□-2J-A	C3SF□-2J-A	C4SF□-2J-A	
			With level gauge	—	C3LF□-8J-A	C4LF□-8J-A	
	Automatic (Auto drain)	Normally closed (N.C.)	—	AD27-2-A	AD37□-2-A	AD47□-2-A	
			With level gauge	—	AD37□-8-A	AD47□-8-A	
		Normally open (N.O.)	—	—	AD38□-2-A	AD48□-2-A	
			With level gauge	—	AD38□-8-A	AD48□-8-A	

∗1 The bowl assembly comes with a bowl seal. □ in bowl assembly part numbers indicates a pipe thread type (applicable tubing for auto drain). No indication is necessary for Rc thread; however, indicate N for NPT thread, and F for G thread (For auto drain, Nil: ø10, N: ø3/8").
Please contact SMC separately for psi and °F unit display specifications.

Option/Part Nos.

Optional specifications	Model			
	AFM20-D AFD20-D	**AFM30-D AFD30-D**	**AFM40-D AFD40-D**	**AFM40-06-D AFD40-06-D**
Bracket assembly∗1	AF24P-070AS	AF34P-070AS	AF44P-070AS	AF49P-070AS
Auto drain	Refer to "Bowl Assembly/Part Nos."			

∗1 The assembly consists of a bracket A/B and 2 mounting screws.

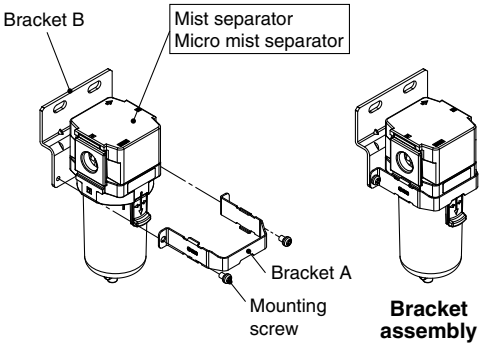

Replacement Parts

Description		Part no.			
		AFM20-D AFD20-D	**AFM30-D AFD30-D**	**AFM40-D AFD40-D**	**AFM40-06-D AFD40-06-D**
Element assembly	**AFM20 to 40-D**	AFM20P-060AS	AFM30P-060AS	AFM40P-060AS	
	AFD20 to 40-D	AFD20P-060AS	AFD30P-060AS	AFD40P-060AS	
Bowl seal		C2SFP-260S	C32FP-260S	C42FP-260S	
Bowl assembly∗1, ∗2		Refer to "Bowl Assembly/Part Nos."			

∗1 The bowl assembly comes with a bowl seal.
∗2 Please contact SMC separately for psi and °F unit display specifications.

Flow Rate Characteristics (Representative values)

- - - - Initial state

AFM20-D

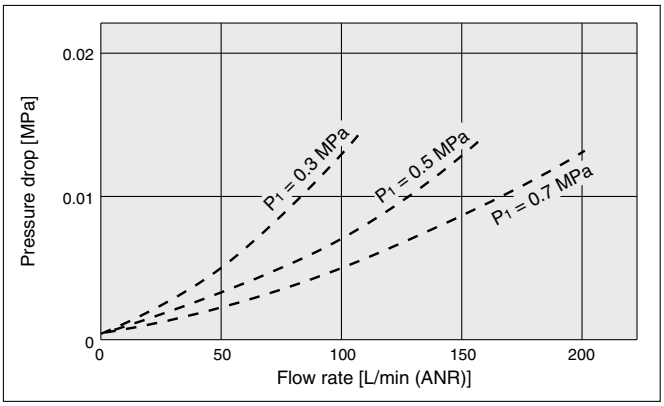

AFD20-D

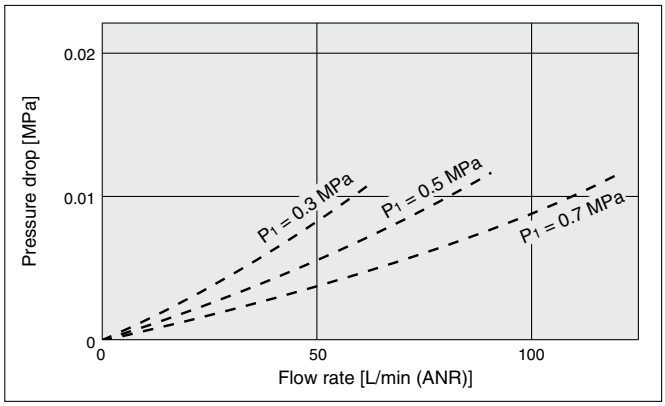

AFM30-D

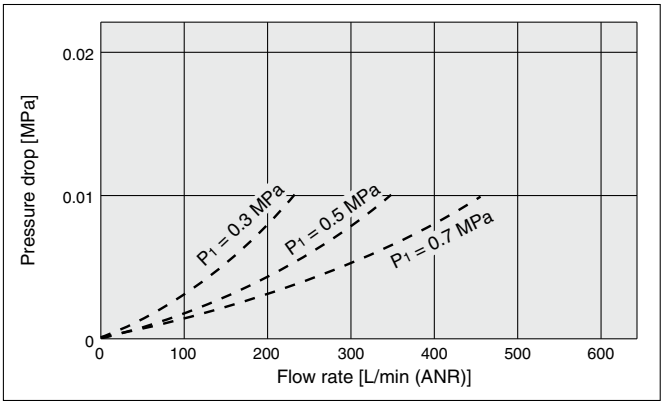

AFD30-D

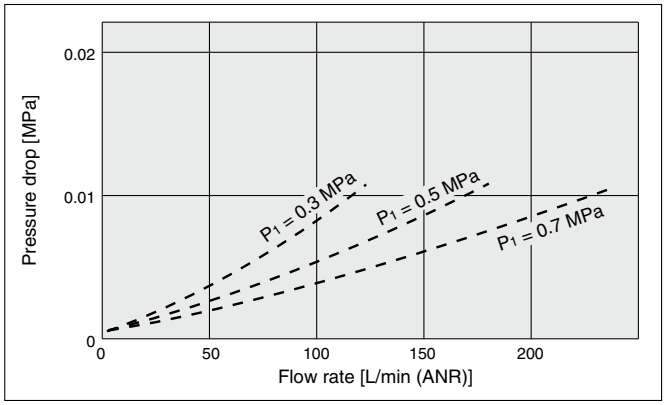

AFM40-D

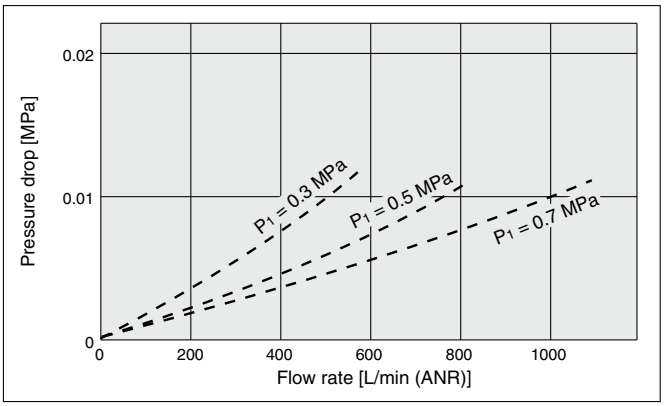

AFD40-D

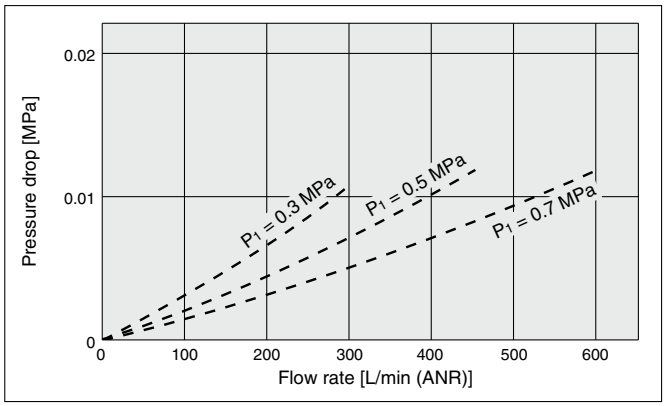

Dimensions

AFM20-D
AFD20-D

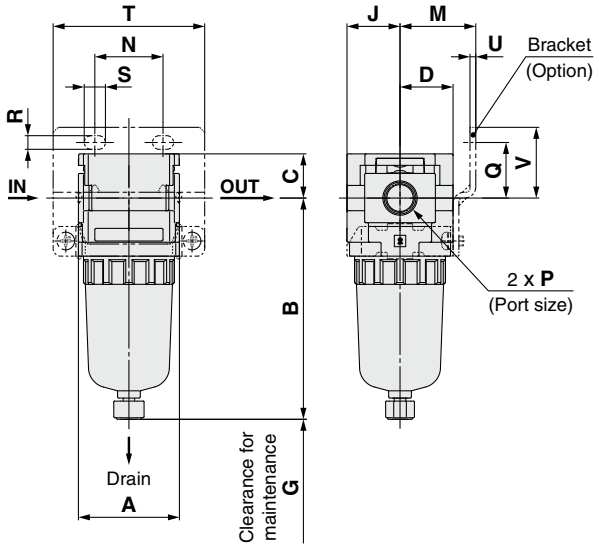

AFM30-D to AFM40-06-D
AFD30-D to AFD40-06-D

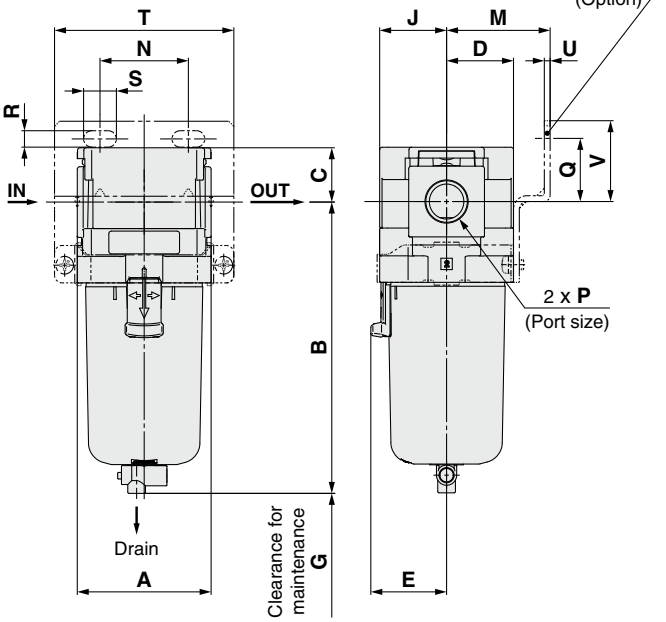

Applicable model	Optional specifications	Semi-standard							
	With auto drain	PC/PA bowl		Metal bowl		Metal bowl with level gauge		With element service indicator	With clogging switch
		Drain cock with barb fitting	With drain guide	With drain cock	With drain guide	With drain cock	With drain guide		
AFM20-D AFD20-D	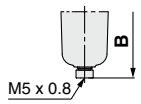		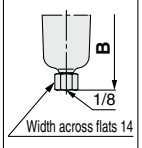		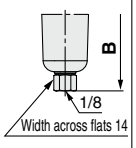			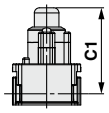	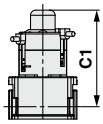
AFM30-D to AFM40-06-D AFD30-D to AFD40-06-D	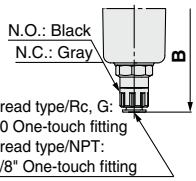	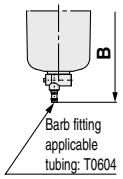	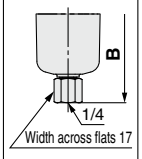	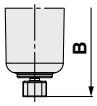	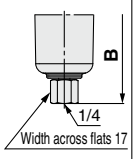	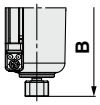	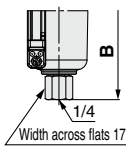	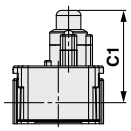	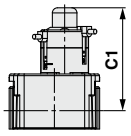

Model	Standard specifications								Optional specifications								
									Bracket mount								With auto drain
	P	A	B	C	D	E	G	J	M	N	Q	R	S	T	U	V	B
AFM20-D/AFD20-D	1/8, 1/4	40	87.6	17.5	21	—	45	21	30	27	22	5.4	8.4	60	2.3	28	104.9
AFM30-D/AFD30-D	1/4, 3/8	53	115.4	21.5	26.5	30	50	26.5	41	35	25	6.5	13	71	2.3	32	157.1
AFM40-D/AFD40-D	1/4, 3/8, 1/2	70	147.1	25.5	35.5	38.4	75	35.5	50	52	30	8.5	12.5	88	2.3	39	186.9
AFM40-06-D/AFD40-06-D	3/4	75	149.1	27	35.5	38.4	75	35.5	50	52	34	8.5	12.5	88	2.3	43	188.9

Model	Semi-standard specifications							
	PC/PA bowl		Metal bowl		Metal bowl with level gauge		With element service indicator	With clogging switch
	With barb fitting	With drain guide	With drain cock	With drain guide	With drain cock	With drain guide		
	B	B	B	B	B	B	C1	C1
AFM20-D/AFD20-D	—	91.4	87.4	93.9	—	—	50.6	56.6
AFM30-D/AFD30-D	123.9	122.2	117.8	122.3	137.8	142.3	54.3	60.3
AFM40-D/AFD40-D	155.6	153.9	149.5	154	169.5	174	58.3	64.3
AFM40-06-D/AFD40-06-D	157.6	155.9	151.5	156	171.5	176	—	—

Mist Separator/*AFM20-D to AFM40-06-D*
Micro Mist Separator/*AFD20-D to AFD40-06-D*
Made to Order

Please contact SMC for detailed dimensions, specifications, and lead times.

Made to Order

① Long Bowl

Drain capacity is greater than that of standard models.

Applicable Models/Drain Capacity

Model	AFM20-D/AFD20-D	AFM30-D/AFD30-D	AFM40-D/AFD40-D	AFM40-06-D/AFD40-06-D
Port size	1/8, 1/4	1/4, 3/8	1/4, 3/8, 1/2	3/4
Drain capacity [cm³]	19	43	88	
B dimension [mm]∗1	108.1	137.4	167.2	169.2

∗1 For polycarbonate bowls. Please contact SMC for other bowl materials.

AFM [30] - [ ] [03] [ ] - [ ] - D - X64

AFD [30] - [ ] [03] [ ] - [ ] - D - X64

❶ ❷ ❸ ❹ ❺ •Long bowl

AFM20-D
AFD20-D

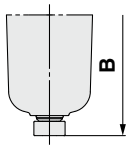

AFM30 to 40-06-D
AFD30 to 40-06-D

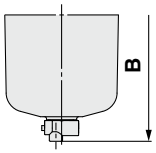

Semi-standard Symbol Selection

· Select one each for **a** to **d**.
· When more than one specification is required, indicate in alphanumeric order.
Example) AFM30-F03B-2JR-D-X64

			Symbol	Description	❶ Body size 20	30	40
❷	Pipe thread type		**Nil**	Rc	●	●	●
			N	NPT	●	●	●
			F	G	●	●	●
			+				
❸	Port size		**01**	1/8	●	—	—
			02	1/4	●	●	●
			03	3/8	—	●	●
			04	1/2	—	—	●
			06	3/4	—	—	●
			+				
❹	Option (Mounting)		**Nil**	Without mounting option	●	●	●
			B∗1	With bracket	●	●	●
			+				
❺	Semi-standard	**a** Bowl∗2	**Nil**	Polycarbonate bowl	●	●	●
			2	Metal bowl	●	●	●
			6	Nylon bowl	●	●	●
			C	With bowl guard	●	—∗3	—∗3
			6C	With bowl guard (Nylon bowl)	●	—∗4	—∗4
			+				
		b Drain port	**Nil**	With drain cock	●	●	●
			J∗5	Drain guide 1/8	●	—	—
				Drain guide 1/4	—	●	●
			W∗6	Drain cock with barb fitting	—	●	●
			+				
		c Flow direction	**Nil**	Flow direction: Left to right	●	●	●
			R	Flow direction: Right to left	●	●	●
			+				
		d Unit	**Nil**	Unit on product label: MPa, °C	●	●	●
			Z∗7	Unit on product label: psi, °F	○∗8	○∗8	○∗8

∗1 Option B is included in the package with the product but does not come assembled. The assembly consists of 2 types of the bracket and 2 mounting screws.
∗2 Refer to chemical data on page 91 for chemical resistance of the bowl.
∗3 A bowl guard is provided as standard equipment (polycarbonate).
∗4 A bowl guard is provided as standard equipment (nylon).
∗5 Without a valve function. The mounting screws are the same as the thread of ❷.
∗6 The combination of metal bowl 2 is not available.
∗7 For the pipe thread type: NPT. This product is for overseas use only according to the New Measurement Act. (The SI unit type is provided for use in Japan.)
∗8 ○: For the pipe thread type: NPT only

Made to Order

Please contact SMC for detailed dimensions, specifications, and lead times.

10-AFM 10-AFD

② Clean Series

For details, refer to the Clean Series/Low Particle Generation section of the **Web Catalog**.

10 - Standard model no.

- **Clean Series**

③ Copper, Fluorine and Silicone-free + Low Particle Generation

For details, refer to the Clean Series/Low Particle Generation section of the **Web Catalog**.

21 - Standard model no.

- **Copper, Fluorine and Silicone-free + Low Particle Generation**

AFM-D/AFD-D Series
Specific Product Precautions 1

Be sure to read this before handling the products. Refer to the back cover for safety instructions. For F.R.L. units precautions, refer to the "Handling Precautions for SMC Products" and the "Operation Manual" on the SMC website: https://www.smcworld.com

Design / Selection

⚠ Warning

1. The bowl material of the standard mist separator and micro mist separator is polycarbonate. Do not use in an environment where they are exposed to or come in contact with organic solvents, chemicals, cutting oil, synthetic oil, alkali, and thread lock solutions.

Chemical resistance of polycarbonate or nylon bowl

Type	Chemical name	Application examples	Material	
			Polycar-bonate	Nylon
Acid	Hydrochloric acid Sulfuric acid Phosphoric acid Chromic acid	Acid washing liquid for metals	△	×
Alkaline	Sodium hydroxide (Caustic soda) Potash Calcium hydroxide (Slack lime) Ammonia water Sodium carbonate	Degreasing of metals Industrial salts Water-soluble cutting oil	×	○
Inorganic salts	Sodium sulfide Potassium nitrate Sodium sulfate	—	×	△
Chlorine solvents	Carbon tetrachloride Chloroform Ethylene chloride Methylene chloride	Cleansing liquid for metals Printing ink Dilution	×	△
Aromatic series	Benzene Toluene Paint thinner	Coatings Dry cleaning	×	△
Ketone	Acetone Methyl ethyl ketone Cyclohexane	Photographic film Dry cleaning Textile industries	×	×
Alcohol	Ethyl alcohol IPA Methyl alcohol	Antifreeze Adhesives	△	×
Oil	Gasoline Kerosene	—	×	○
Ester	Phthalic acid dimethyl Phthalic acid diethyl Acetic acid	Synthetic oil Anti-rust additives	×	○
Ether	Methyl ether Ethyl ether	Brake oil additives	×	○
Amino	Methyl amino	Cutting oil Brake oil additives Rubber accelerator	×	×
Others	Thread-lock fluid Seawater Leak tester	—	×	△
○: Essentially safe △: Some effects may occur. ×: Effects will occur.				

∗ When the above factors are present, or there is some doubt, use a metal bowl for safety.
∗ The display window material for the semi-standard type with an element service indicator or clogging switch is nylon.

Air Supply

⚠ Caution

1. Install an air filter (AF series) as a pre-filter on the inlet side of the mist separator to prevent premature clogging.
2. Install a mist separator (AFM series) as a pre-filter on the inlet side of the micro mist separator to prevent premature clogging.
3. Do not install on the inlet side of the dryer as this can cause premature clogging of the element.

Maintenance

⚠ Warning

1. Replace the element every 2 years or when the differential pressure (pressure drop) becomes 0.1 MPa, whichever comes first, to prevent damage to the element.

⚠ Caution

1. For the product equipped with a clogging switch, replace the element even if it has been used for 2 years or less when the installed auto switch (SW) is detected.

Element status when auto switch is detected

Symbol	No. of SW	Installation of SW	When SW is detected
-M	SW1	No	—
	SW2	Yes	Warning
-MM	SW1	Yes	Caution
	SW2	Yes	Warning

Caution: Replacement is recommended because the element is clogged.
Warning: The element is clogged, which may result in the destruction of the element. Be sure to replace the element.

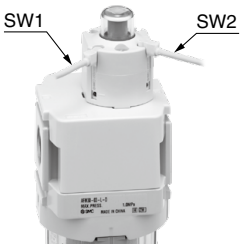

2. Since the clogging switch does not have an output holding mechanism, note that the output will be OFF when there is no air flow in the element (when the equipment is stopped, etc.).

Mounting / Adjustment

⚠ Caution

1. When the bowl is installed on the mist separator (AFM30-D/AFM40-D), or micro mist separator (AFD30-D/AFD40-D), install them so that the lock button lines up to the groove of the front (or the back) of the body to avoid drop or damage of the bowl.

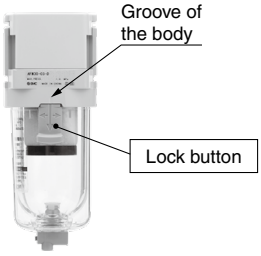

AFM-D/AFD-D Series
Specific Product Precautions 2

Be sure to read this before handling the products. Refer to the back cover for safety instructions. For F.R.L. units precautions, refer to the "Handling Precautions for SMC Products" and the "Operation Manual" on the SMC website: https://www.smcworld.com

Mounting / Adjustment

⚠ Warning

1. When using the product with a clogging switch, note the following points

(1) Refer to the figure below to check the position of the auto switch.

For 1 switch (For symbol "M")

Only on the right side when looking at the nameplate

For 2 switches (For symbol "MM")

Both the right and left sides when looking at the nameplate

(2) Do not hit the auto switch with a tool or allow it to receive any other impacts. Doing so may cause damage.

(3) Do not attach or detach the auto switch equipped with a clogging switch. Otherwise, the detection accuracy of the clogging switch may be reduced. In addition, note that an auto switch with an element service indicator cannot be installed in combination.

(4) Do not place magnetic objects near the product. Otherwise, a machine failure may result.

Design

⚠ Caution

1. Design the system so that the mist separator or micro mist separator is installed in a pulsation-free location. The difference between internal and external pressure inside the element should be kept within 0.1 MPa, as exceeding this value could cause damage.

Selection

⚠ Caution

1. Do not allow air flow that exceeds the rated flow. If the air flow is allowed outside the range of the rated flow even momentarily, drainage and lubricant may splash at the outlet side or cause damage to the component.

2. Do not use in a low pressure application (such as a blower). An F.R.L. unit has its own minimum operating pressure depending on the equipment and is designed specifically to function with compressed air. If used below the minimum operating pressure, a loss of performance and malfunction can occur. Please contact SMC if an application under such conditions cannot be avoided.

Handling

⚠ Caution

1. The element service indicator (semi-standard: L) and clogging switch (semi-standard: M, MM) are used to check the pressure differential between the IN and OUT sides.
When operating at a flow rate with a pressure differential exceeding 0.025 MPa, the element service indicator and clogging switch may operate even when the element is in its initial state.

2. For models with an element service indicator or clogging switch, adjust the flow rate in the direction that increases the flow rate.
If the designated flow rate is exceeded, reset the flow rate to zero and readjust it until the designated flow rate is reached.

3. For models with an element service indicator or clogging switch, as the element becomes more clogged, the indicator will display an increasing level of red. Be sure to replace the element before the level of red reaches the top of the indicator.

Modular Type Regulator
AR Series

Regulator AR Series	Model	Port size	Set pressure	Options
	AR20(K)-D	1/8, 1/4	0.05 to 0.85 MPa 0.02 to 0.2 MPa	Bracket Set nut (for panel mount) Square embedded type pressure gauge Right angle square type pressure gauge Digital pressure switch Round type pressure gauge
	AR30(K)-D	1/4, 3/8		
	AR40(K)-D	1/4, 3/8, 1/2		
	AR40(K)-06-D	3/4		
	AR50(K)-D	3/4, 1		Bracket Square embedded type pressure gauge Digital pressure switch Round type pressure gauge
p. 93 to 103	**AR60(K)-D**	1		

Regulator

AR20-D to AR60-D

Regulator with Backflow Function

AR20K-D to AR60K-D

Symbol

Regulator

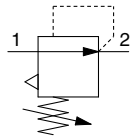

Regulator with Backflow Function

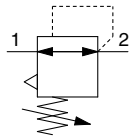

· **Models with the backflow function include a mechanism which allows for the air pressure in the outlet side to be released to the inlet side.**

Example 1)
When the pressure in the rear and the front of the cylinder differs:

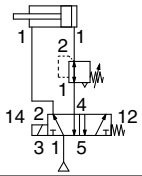

Example 2)
When the air supply is cut off and releasing the inlet pressure to the atmosphere, the residual pressure release of the outlet side can be ensured.

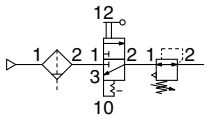

How to Order

AR 30 ❑ – ❑ 03 BE – ❑ – D

❶ ❷ ❸ ❹ ❺ ❻

Option and Semi-standard Symbol Selection

· Select one each for **a** to **g**.
· When more than one specification is required, indicate in alphanumeric order.
Example) AR30K-F03BE-1NR-D

			Symbol	Description	❶ Body size 20	30	40	50	60
❷	With backflow function		**Nil**	Without backflow function	●	●	●	●	●
			K*1	With backflow function	●	●	●	●	●
			+						
❸	Pipe thread type		**Nil**	Rc	●	●	●	●	●
			N	NPT	●	●	●	●	●
			F	G	●	●	●	●	●
			+						
❹	Port size		**01**	1/8	●	—	—	—	—
			02	1/4	●	●	●	—	—
			03	3/8	—	●	●	—	—
			04	1/2	—	—	●	—	—
			06	3/4	—	—	●	●	—
			10	1	—	—	—	●	●
			+						
❺	Option*2	**a** Mounting	**Nil**	Without mounting option	●	●	●	●	●
			B*3	With bracket	●	●	●	●	●
			H	With set nut (for panel mount)	●	●	●	—	—
			+						
		b Pressure gauge*4, *5	**Nil**	Without pressure gauge	●	●	●	●	●
			E	Square embedded type pressure gauge (with limit indicator)	●	●	●	●	●
			G	Round type pressure gauge (with limit indicator)	●	●	●	●	●
			J*6, *7	Right angle square type pressure gauge (with limit indicator)	●	●	●	—	—
			M	Round type pressure gauge (with color zone)	●	●	●	●	●
		b Digital pressure switch*8	**E1**	Output: NPN output, Electrical entry: Wiring bottom entry	●	●	●	●	●
			E2	Output: NPN output, Electrical entry: Wiring top entry	●	●	●	●	●
			E3	Output: PNP output, Electrical entry: Wiring bottom entry	●	●	●	●	●
			E4	Output: PNP output, Electrical entry: Wiring top entry	●	●	●	●	●

AR30-D

			Symbol	Description	❶ Body size 20	30	40	50	60
❻ Semi-standard	c	Set pressure*9	**Nil**	0.05 to 0.85 MPa setting	●	●	●	●	●
			1	0.02 to 0.2 MPa setting	●	●	●	●	●
			+						
	d	Exhaust mechanism	**Nil**	Relieving type	●	●	●	●	●
			N	Non-relieving type	●	●	●	●	●
			+						
	e	Flow direction	**Nil**	Flow direction: Left to right	●	●	●	●	●
			R	Flow direction: Right to left	●	●	●	●	●
			+						
	f	Knob	**Nil**	Downward	●	●	●	●	●
			Y	Upward	●	●	●	●	●
			+						
	g	Unit	**Nil**	Unit on product label: MPa, Pressure gauge in SI units: MPa	●	●	●	●	●
			Z*10	Unit on product label: psi, Pressure gauge: MPa/psi dual scale	○*12	○*12	○*12	○*12	○*12
			ZA*11	Digital pressure switch: With unit selection function	△*13	△*13	△*13	△*13	△*13

∗1 Set the inlet pressure to at least 0.05 MPa higher than the set pressure.
∗2 Options B, G, H, and M are not assembled and supplied loose at the time of shipment.
∗3 The assembly consists of a bracket and set nuts (applicable to the AR20(K)-D to AR40(K)-D).
For the AR50(K)-D and AR60(K)-D, the assembly consists of 2 types of the bracket and 2 mounting screws.
∗4 When the pressure gauge is attached, a 1.0 MPa pressure gauge will be fitted for standard (0.85 MPa) type. 0.4 MPa pressure gauge for 0.2 MPa type.
∗5 When the type without a backflow function + no pressure gauge or pressure gauge “G” or “M” is selected, it is not possible to change to an “E,” “J,” “E1,” “E2,” “E3,” or “E4” later.
When the type with a backflow function is selected, it is possible to change the pressure gauge later.
∗6 Cannot be selected for the type with a set nut (option “H”)
∗7 The direction the pressure gauge scale plate faces is from the knob side.
∗8 When choosing with H (panel mount), the installation space for lead wires will not be secured. In this case, select “wiring top entry” for the electrical entry. (Select “wiring bottom entry” when the semi-standard Y is chosen simultaneously.)
∗9 Pressure can be set higher than the specification pressure in some cases, but use pressure within the specification range.
∗10 For the pipe thread type: NPT
This product is for overseas use only according to the New Measurement Act. (The SI unit type is provided for use in Japan.) Cannot be used with M: Round type pressure gauge (with color zone). Available by request for special. The digital pressure switch will be equipped with the unit selection function, setting to psi initially.
∗11 For options: E1, E2, E3, E4
This product is for overseas use only according to the New Measurement Act. (The SI unit type is provided for use in Japan.)
∗12 ○: For the pipe thread type: NPT only
∗13 △: Select with options: E1, E2, E3, E4.

AR20-D to AR60-D Series
AR20K-D to AR60K-D Series

Standard Specifications

Model	AR20(K)-D	AR30(K)-D	AR40(K)-D	AR40(K)-06-D	AR50(K)-D	AR60(K)-D
Port size	1/8, 1/4	1/4, 3/8	1/4, 3/8, 1/2	3/4	3/4, 1	1
Pressure gauge port size∗1	1/8					
Fluid	Air					
Ambient and fluid temperatures∗2	–5 to 60°C (No freezing)					
Proof pressure	1.5 MPa					
Max. operating pressure	1.0 MPa					
Set pressure range	0.05 to 0.85 MPa					
Construction	Relieving type					
Weight	0.14 kg	0.27 kg	0.48 kg	0.51 kg	1.13 kg	1.25 kg

∗1 Pressure gauge connection threads are not available for F.R.L. unit with a square embedded type pressure gauge or with a digital pressure switch.
∗2 –5 to 50°C for the products with the digital pressure switch

Option/Part Nos.

Optional specifications			Model					
			AR20(K)-D	**AR30(K)-D**	**AR40(K)-D**	**AR40(K)-06-D**	**AR50(K)-D**	**AR60(K)-D**
Bracket assembly∗1			AR23P-270AS	AR33P-270AS	AR43P-270AS		AR54P-270AS	
Set nut			AR23P-260S	AR33P-260S	AR43P-260S		—∗2	
Pressure gauge∗3	**Round type**	**Standard**	G36-10-□01		G46-10-□01			
		0.02 to 0.2 MPa setting	G36-4-□01		G46-4-□01			
	Round type (with color zone)	**Standard**	G36-10-□01-L		G46-10-□01-L			
		0.02 to 0.2 MPa setting	G36-4-□01-L		G46-4-□01-L			
	Square embedded type∗4	**Standard**	GC3-10AS-D [GC3P-030AS (Pressure gauge cover only)]					
		0.02 to 0.2 MPa setting	GC3-4AS-D [GC3P-030AS (Pressure gauge cover only)]					
	Right angle square type∗5	**Standard**	GC3-10AS-J-D [GC3-10AS-JA-D]				—	
		0.02 to 0.2 MPa setting	GC3-4AS-J-D [GC3-4AS-JA-D]				—	
Digital pressure switch		**NPN output, Wiring bottom entry**	ISE35-N-25-MLA-X523 [ISE35-N-25-M (Switch body only)]∗6					
		NPN output, Wiring top entry	ISE35-R-25-MLA-X523 [ISE35-R-25-M (Switch body only)]∗6					
		PNP output, Wiring bottom entry	ISE35-N-65-MLA-X523 [ISE35-N-65-M (Switch body only)]∗6					
		PNP output, Wiring top entry	ISE35-R-65-MLA-X523 [ISE35-R-65-M (Switch body only)]∗6					

∗1 The assembly consists of a bracket and set nuts. For the AR50(K)-D and AR60(K)-D, the assembly consists of a bracket A/B and 2 mounting screws.
∗2 Please contact SMC regarding the set nuts for the AR50(K)-D and AR60(K)-D.
∗3 □ in part numbers for a round pressure gauge indicates a pipe thread type. No indication is necessary for R; however, indicate N for NPT. Please contact SMC regarding the pressure gauge supply for both MPa and psi unit specifications.
∗4 Including one O-ring and 2 mounting screws. [ ]: Pressure gauge cover only
∗5 The right angle square type pressure gauge only includes the pressure gauge body. The pressure gauge body comes with 1 O-ring and 2 mounting screws. In addition, the part number in brackets includes a pressure gauge with a right angle adapter as well as an adapter, lock pin, 1 O-ring, and 2 mounting screws.
∗6 In addition to the pressure switch body, lead wire with connector (2 m), adapter, lock pin, O-ring (1 pc.), mounting screws (2 pcs.) are attached. [ ]: Switch body only (For the digital pressure switch specifications, refer to page 130.)

AR20(K)-D to AR40(K)-06-D

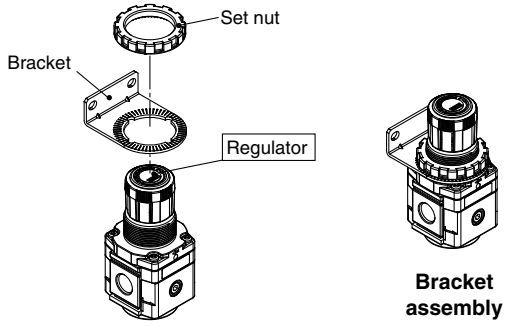

AR50(K)-D/AR60(K)-D

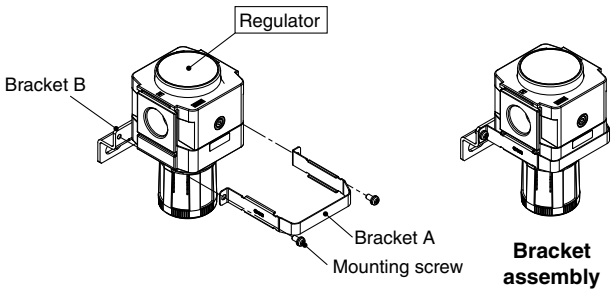

Replacement Parts

Description		Part no.					
		AR20(K)-D	**AR30(K)-D**	**AR40(K)-D**	**AR40(K)-06-D**	**AR50(K)-D**	**AR60(K)-D**
Valve assembly		AR24P-060AS	AR34P-060AS	AR44P-060AS	AR49P-060AS	AR54P-060AS	AR64P-060AS
Diaphragm assembly	**Relieving type**	AR24P-150AS	AR34P-150AS	AR44P-150AS		AR54P-150AS	
	Non-relieving type	AR24P-150AS-N	AR34P-150AS-N	AR44P-150AS-N		AR54P-150AS-N	
Valve guide assembly		AR24P-050AS	AR34P-050AS	AR44P-050AS		AR54P-050AS	
Check valve assembly∗1		AR24KP-020AS					

∗1 The check valve assembly is applicable for a regulator with backflow function (AR20K-D to AR60K-D) only. The assembly consists of a check valve cover, check valve body assembly, and 2 mounting screws.

Flow Rate Characteristics (Representative values)

——— Inlet pressure: 1.0 MPa
- - - Inlet pressure: 0.7 MPa

AR20(K)-D

Rc1/4

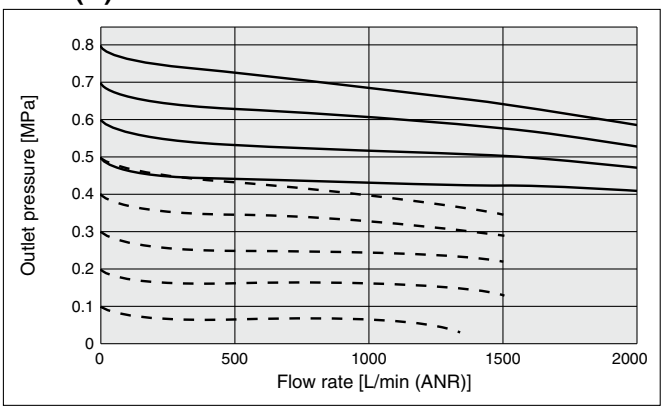

AR30(K)-D

Rc3/8

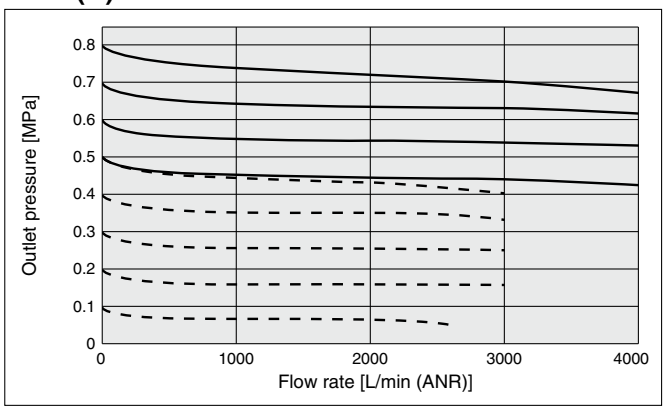

AR40(K)-D

Rc1/2

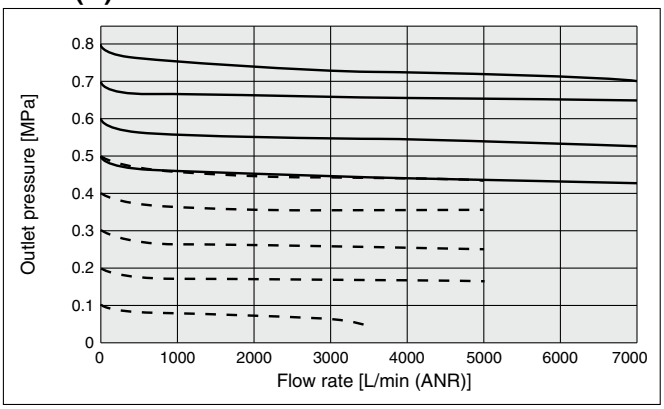

AR40(K)-06-D

Rc3/4

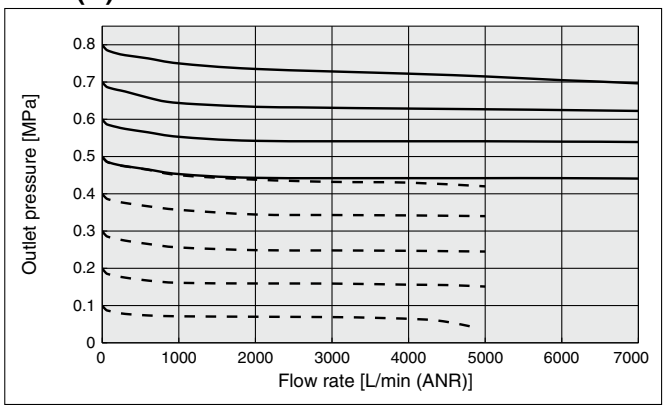

AR50(K)-D

Rc1

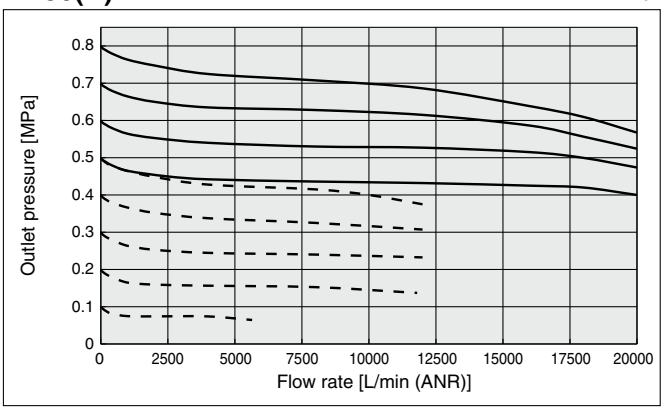

AR60(K)-D

Rc1

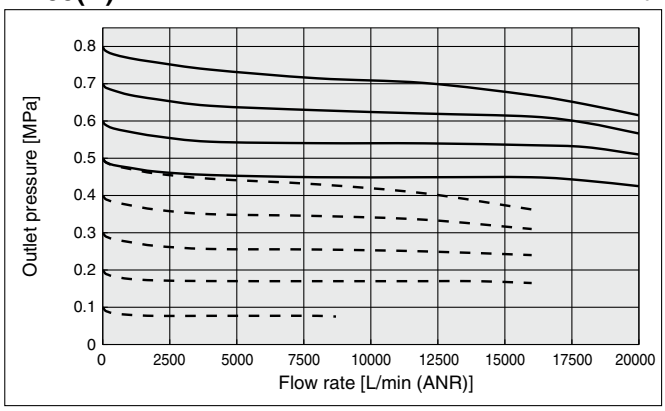

Pressure Characteristics (Representative values)

Conditions: Inlet pressure of 0.7 MPa, Outlet pressure of 0.2 MPa, Flow rate 20 L/min (ANR)

AR20(K)-D

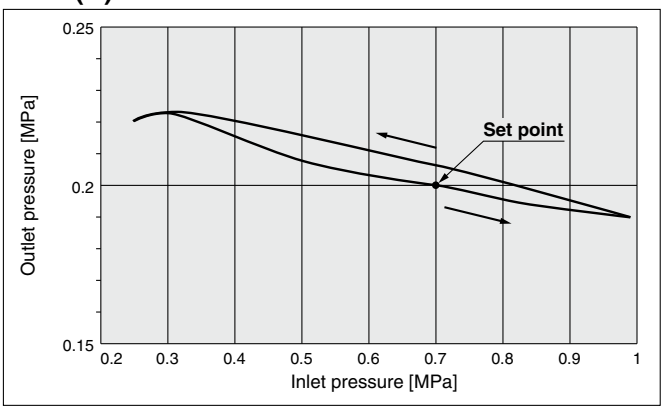

AR30(K)-D

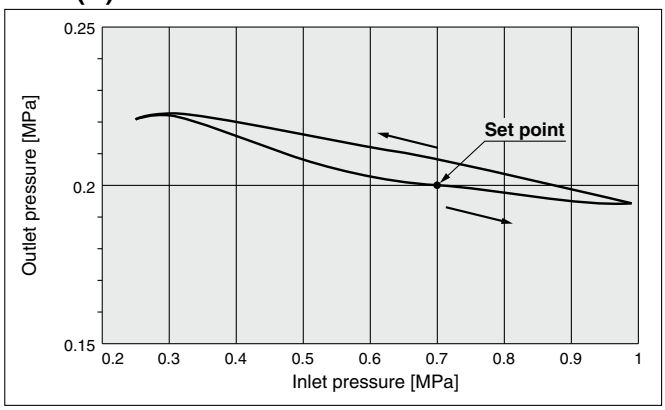

AR40(K)-D

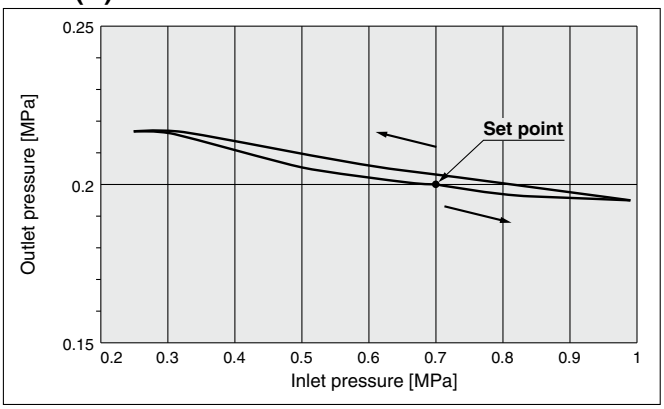

AR40(K)-06-D

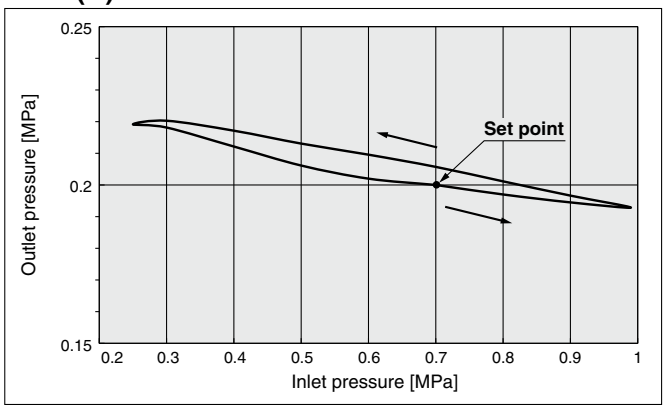

AR50(K)-D

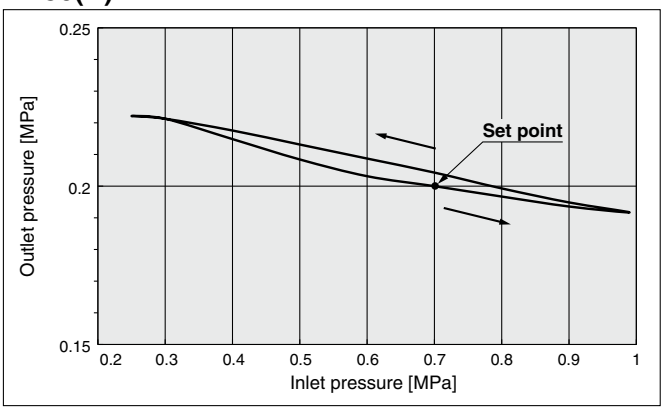

AR60(K)-D

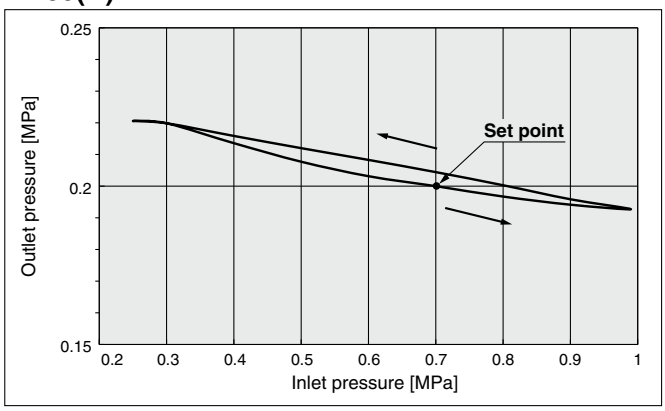

Dimensions

Standard (Round Type Pressure Gauge)
AR20-D to AR40-06-D

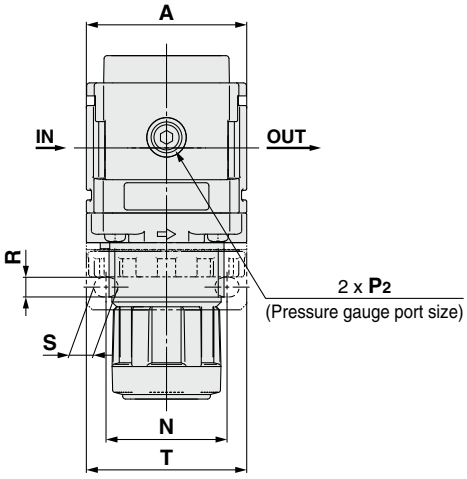

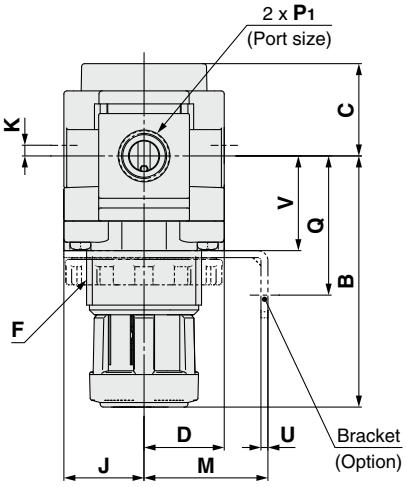

Panel cutout dimensions

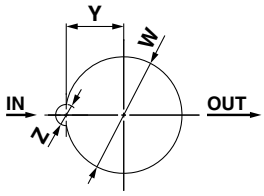

Plate thickness
AR20-D to AR30-D : Max. 3.5
AR40-D to AR40-06-D: Max. 5

AR50-D to AR60-D

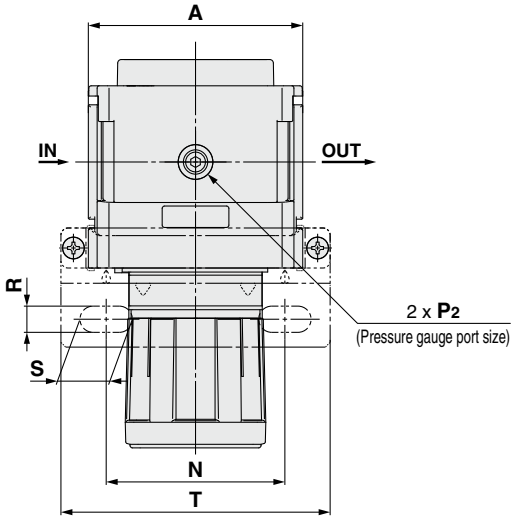

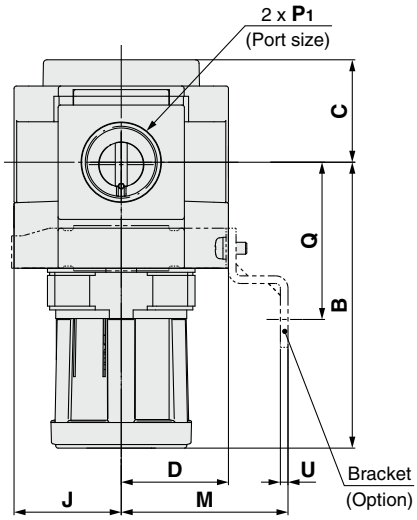

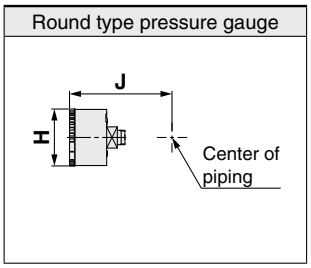

Model	Standard specifications									Optional specifications			
										Round type pressure gauge		Round type pressure gauge (with color zone)	
	P1	P2	A	B*1	C	D	F	J	K	H	J	H	J
AR20-D	1/8, 1/4	1/8	40	66.8	26.5	21	M28 x 1	21	2	ø37.5	57.5	ø37.5	58.5
AR30-D	1/4, 3/8	1/8	53	86.5	30.5	26.5	M38 x 1.5	26.5	3.5	ø37.5	63	ø37.5	64
AR40-D	1/4, 3/8, 1/2	1/8	70	91.5	35.5	35.5	M42 x 1.5	35.5	—	ø42.5	73	ø42.5	73
AR40-06-D	3/4	1/8	75	93	35.5	35.5	M42 x 1.5	35.5	—	ø42.5	73	ø42.5	73
AR50-D	3/4, 1	1/8	90	125	43	45	—	45	—	ø42.5	82.5	ø42.5	82.5
AR60-D	1	1/8	95	155	45	45	—	45	—	ø42.5	82.5	ø42.5	82.5

Model	Optional specifications										
	Bracket mount							Panel mount			
	M	N	Q	R	S	T	U	V	W	Y	Z
AR20-D	30	34	43.9	5.4	15.4	55	2.3	24.7	28.5	14	6
AR30-D	41	40	46	6.5	8	53	2.3	31.3	38.5	19	7
AR40-D	50	54	54	8.5	10.5	70	2.3	35.5	42.5	21	7
AR40-06-D	50	54	55.5	8.5	10.5	70	2.3	37	42.5	21	7
AR50-D	70	75	66	11	22	113	3.2	—	—	—	—
AR60-D	70	75	66	11	22	113	3.2	—	—	—	—

*1 The dimension of B is the length when the regulator knob is unlocked.

AR20-D to AR60-D Series
AR20K-D to AR60K-D Series

Dimensions

Standard (Square Embedded Type Pressure Gauge, Right Angle Square Type Pressure Gauge, Digital Pressure Switch)

AR20-□□□ E, E1, E2, E3, E4, J -D to AR40-□□□ E, E1, E2, E3, E4, J -D

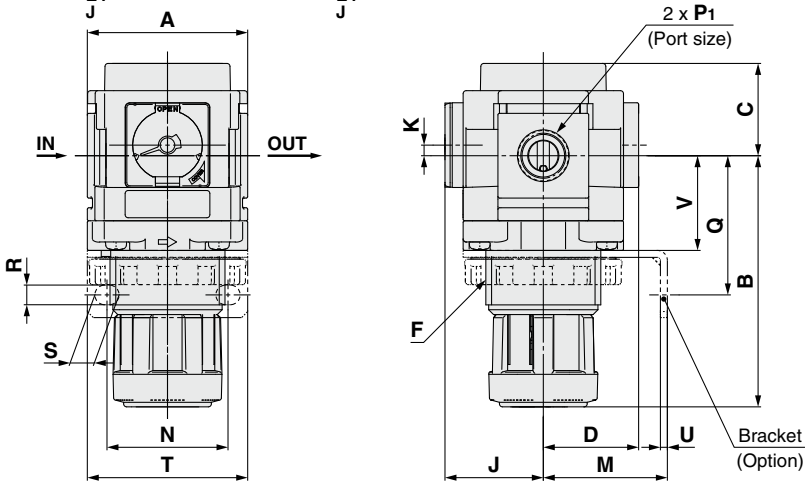

Panel cutout dimensions

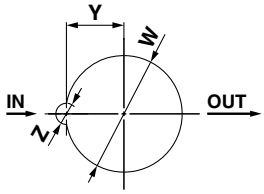

Plate thickness
AR20-D to AR30-D : Max. 3.5
AR40-D to AR40-06-D: Max. 5

AR50-□□□ E, E1, E2, E3, E4 -D to AR60-□□□ E, E1, E2, E3, E4 -D

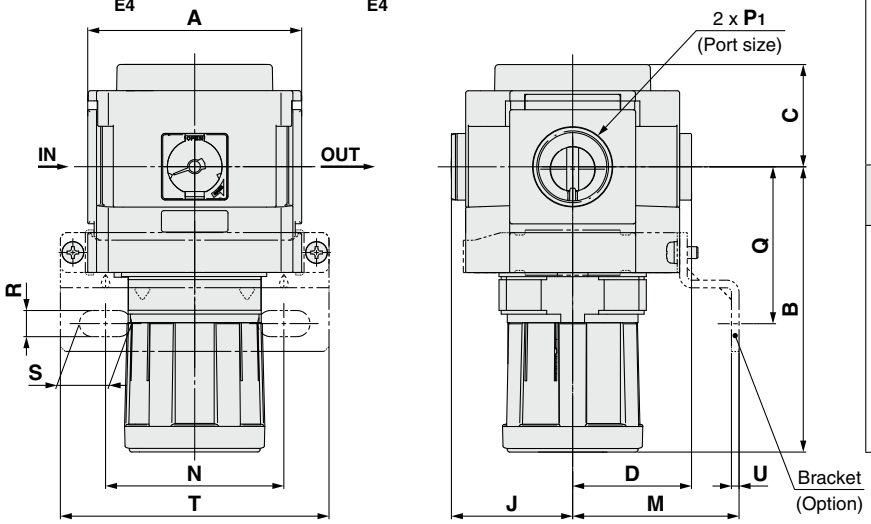

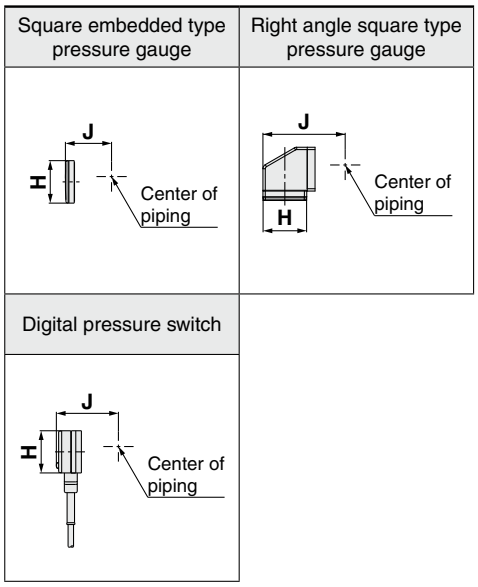

Model	Standard specifications							Optional specifications					
								Square embedded type pressure gauge		Right angle square type pressure gauge		Digital pressure switch	
	P1	A	B*1	C	D	F	K	H	J	H	J	H	J
AR20-D	1/8, 1/4	40	66.8	26.5	26	M28 x 1	2	□28	27	□28	54.3	□27.8	37.5
AR30-D	1/4, 3/8	53	86.5	30.5	31.5	M38 x 1.5	3.5	□28	32.5	□28	59.8	□27.8	43
AR40-D	1/4, 3/8, 1/2	70	91.5	35.5	40.5	M42 x 1.5	—	□28	41.5	□28	68.8	□27.8	52
AR40-06-D	3/4	75	93	35.5	40.5	M42 x 1.5	—	□28	41.5	□28	68.8	□27.8	52
AR50-D	3/4, 1	90	125	43	50	—	—	□28	51	—	—	□27.8	61.5
AR60-D	1	95	155	45	50	—	—	□28	51	—	—	□27.8	61.5

Model	Optional specifications										
	Bracket mount							Panel mount			
	M	N	Q	R	S	T	U	V	W	Y	Z
AR20-D	30	34	43.9	5.4	15.4	55	2.3	24.7	28.5	14	6
AR30-D	41	40	46	6.5	8	53	2.3	31.3	38.5	19	7
AR40-D	50	54	54	8.5	10.5	70	2.3	35.5	42.5	21	7
AR40-06-D	50	54	55.5	8.5	10.5	70	2.3	37	42.5	21	7
AR50-D	70	75	66	11	22	113	3.2	—	—	—	—
AR60-D	70	75	66	11	22	113	3.2	—	—	—	—

*1 The dimension of B is the length when the regulator knob is unlocked.

Dimensions

With Backflow Function (Round Type Pressure Gauge, Square Embedded Type Pressure Gauge, Right Angle Square Type Pressure Gauge, Digital Pressure Switch)

AR20K-D to AR40K-06-D

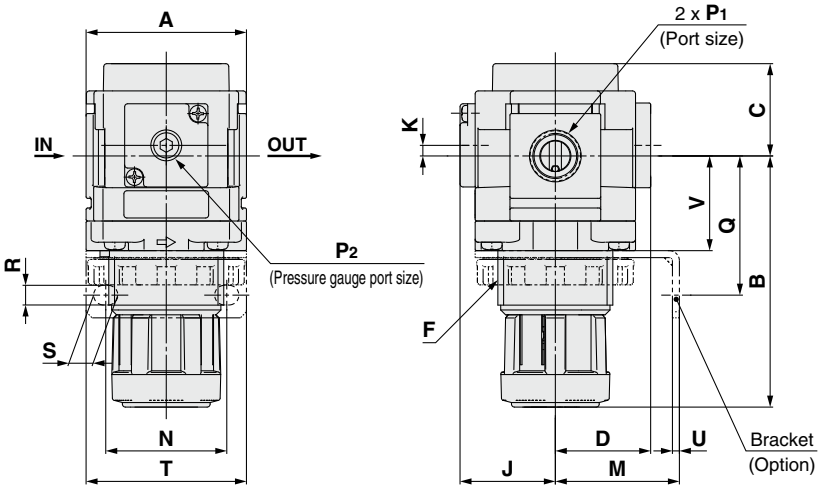

Panel cutout dimensions

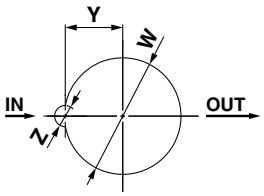

Plate thickness
AR20K-D to AR30K-D : Max. 3.5
AR40K-D to AR40K-06-D: Max. 5

AR50K-D to AR60K-D

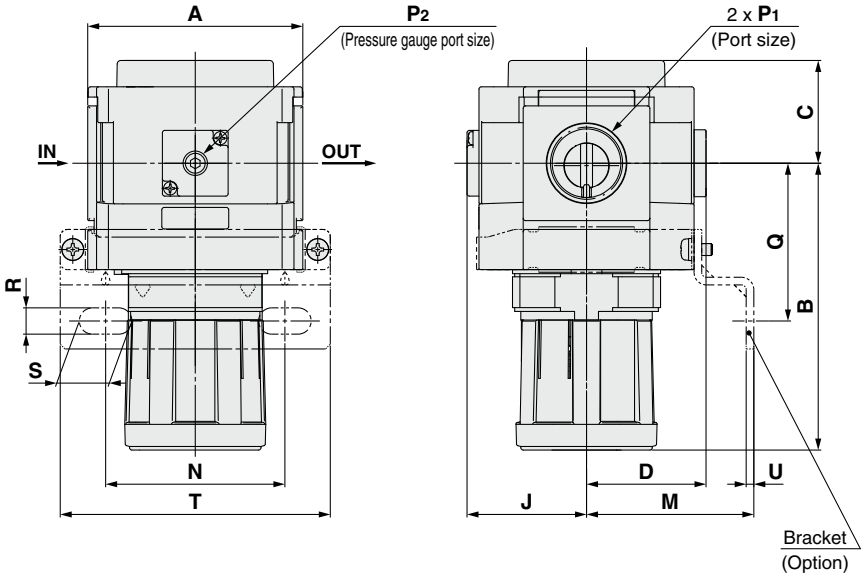

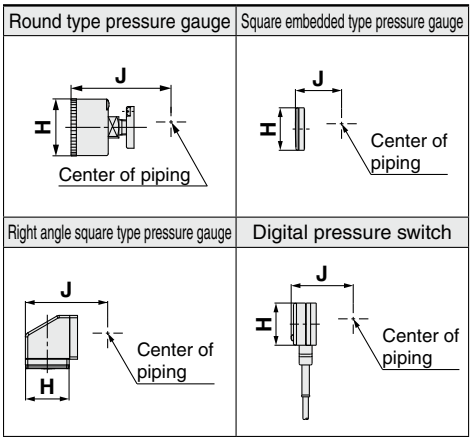

Model	Standard specifications									Optional specifications			
										Round type pressure gauge		Round type pressure gauge (with color zone)	
	P1	P2	A	B*1	C	D	F	J	K	H	J	H	J
AR20K-D	1/8, 1/4	1/8	40	66.8	26.5	26	M28 x 1	26	2	ø37.5	62.5	ø37.5	63.5
AR30K-D	1/4, 3/8	1/8	53	86.5	30.5	31.5	M38 x 1.5	31.5	3.5	ø37.5	68	ø37.5	69
AR40K-D	1/4, 3/8, 1/2	1/8	70	91.5	35.5	40.5	M42 x 1.5	40.5	—	ø42.5	78	ø42.5	78
AR40K-06-D	3/4	1/8	75	93	35.5	40.5	M42 x 1.5	40.5	—	ø42.5	78	ø42.5	78
AR50K-D	3/4, 1	1/8	90	125	43	50	—	50	—	ø42.5	87.5	ø42.5	87.5
AR60K-D	1	1/8	95	155	45	50	—	50	—	ø42.5	87.5	ø42.5	87.5

Model	Optional specifications																
	Square embedded type pressure gauge		Right angle square type pressure gauge		Digital pressure switch		Bracket mount							Panel mount			
	H	J	H	J	H	J	M	N	Q	R	S	T	U	V	W	Y	Z
AR20K-D	□28	27	□28	54.3	□27.8	37.5	30	34	43.9	5.4	15.4	55	2.3	24.7	28.5	14	6
AR30K-D	□28	32.5	□28	59.8	□27.8	43	41	40	46	6.5	8	53	2.3	31.3	38.5	19	7
AR40K-D	□28	41.5	□28	68.8	□27.8	52	50	54	54	8.5	10.5	70	2.3	35.5	42.5	21	7
AR40K-06-D	□28	41.5	□28	68.8	□27.8	52	50	54	55.5	8.5	10.5	70	2.3	37	42.5	21	7
AR50K-D	□28	51	—	—	□27.8	61.5	70	75	66	11	22	113	3.2	—	—	—	—
AR60K-D	□28	51	—	—	□27.8	61.5	70	75	66	11	22	113	3.2	—	—	—	—

*1 The dimension of B is the length when the regulator knob is unlocked.

Regulator/*AR20-D to AR60-D*
Regulator with Backflow Function/*AR20K-D to AR60K-D*
Made to Order

Please contact SMC for detailed dimensions, specifications, and lead times.

Made to Order

①0.4 MPa Setting

The setting specification is 0.4 MPa. When a pressure gauge is included, the display will show a range from 0 to 0.7 MPa.

Specifications

Made-to-order part no.	-X406
Proof pressure [MPa]	1.5
Max. operating pressure [MPa]	1.0
Set pressure range [MPa]∗1	0.05 to 0.4

∗1 Pressure can be set higher than the specification pressure in some cases, but use pressure within the specification range.

Applicable Models

Model	AR20(K)-D	AR30(K)-D	AR40(K)-D	AR40(K)-06-D	AR50(K)-D	AR60(K)-D
Port size	1/8, 1/4	1/4, 3/8	1/4, 3/8, 1/2	3/4	3/4, 1	1

AR 30 ☐ - ☐ 03 ☐ - ☐ - D - X406

❶ ❷ ❸ ❹ ❺ ❻ — 0.4 MPa setting

Option and Semi-standard Symbol Selection

- Select one each for **a** to **f**.
- When more than one specification is required, indicate in alphabetical order.

Example) AR30K-F03BE-NR-D-X406

			Symbol	Description	❶ Body size 20	30	40	50	60
❷ With backflow function			**Nil**	Without backflow function	●	●	●	●	●
			K∗1	With backflow function	●	●	●	●	●
			+						
❸ Pipe thread type			**Nil**	Rc	●	●	●	●	●
			N	NPT	●	●	●	●	●
			F	G	●	●	●	●	●
			+						
❹ Port size			**01**	1/8	●	—	—	—	—
			02	1/4	●	●	●	—	—
			03	3/8	—	●	●	—	—
			04	1/2	—	—	●	—	—
			06	3/4	—	—	●	●	—
			10	1	—	—	—	●	●
			+						
❺ Option∗2	**a**	Mounting	**Nil**	Without mounting option	●	●	●	●	●
			B∗3	With bracket	●	●	●	●	●
			H	With set nut (for panel mount)	●	●	●	—	—
			+						
	b	Pressure gauge∗4	**Nil**	Without pressure gauge	●	●	●	●	●
			E	Square embedded type pressure gauge (with limit indicator)	●	●	●	●	●
			G	Round type pressure gauge (with limit indicator)	●	●	●	●	●
			J∗5,∗6	Right angle square type pressure gauge (with limit indicator)	●	●	●	—	—
			M	Round type pressure gauge (with color zone)	●	●	●	●	●
		Digital pressure switch∗7	**E1**	Output: NPN output, Electrical entry: Wiring bottom entry	●	●	●	●	●
			E2	Output: NPN output, Electrical entry: Wiring top entry	●	●	●	●	●
			E3	Output: PNP output, Electrical entry: Wiring bottom entry	●	●	●	●	●
			E4	Output: PNP output, Electrical entry: Wiring top entry	●	●	●	●	●
			+						
❻ Semi-standard	**c**	Exhaust mechanism	**Nil**	Relieving type	●	●	●	●	●
			N	Non-relieving type	●	●	●	●	●
			+						
	d	Flow direction	**Nil**	Flow direction: Left to right	●	●	●	●	●
			R	Flow direction: Right to left	●	●	●	●	●
			+						
	e	Knob	**Nil**	Downward	●	●	●	●	●
			Y	Upward	●	●	●	●	●
			+						
	f	Unit	**Nil**	Unit on product label: MPa, Pressure gauge in SI units: MPa	●	●	●	●	●
			Z∗8	Unit on product label: psi, Pressure gauge: MPa/psi dual scale	○∗10	○∗10	○∗10	○∗10	○∗10
			ZA∗9	Digital pressure switch: With unit selection function	△∗11	△∗11	△∗11	△∗11	△∗11

∗1 Set the inlet pressure to at least 0.05 MPa higher than the set pressure.
∗2 Options B, G, H, and M are not assembled and supplied loose at the time of shipment.
∗3 The assembly consists of a bracket and set nuts (applicable to the AR20(K)-D to AR40(K)-D).
The AR50(K)-D and AR60(K)-D assemblies include 2 types of brackets and 2 mounting screws.
∗4 A 0.7 MPa pressure gauge will be fitted.
∗5 Cannot be selected for the type with a set nut (option "H")
∗6 The direction the pressure gauge scale plate faces is from the knob side.
∗7 When choosing with H (panel mount), the installation space for lead wires will not be secured. In this case, select "wiring top entry" for the electrical entry. (Select "wiring bottom entry" when the semi-standard Y is chosen simultaneously.)
∗8 For the pipe thread type: NPT
This product is for overseas use only according to the New Measurement Act. (The SI unit type is provided for use in Japan.) Cannot be used with M: Round type pressure gauge (with color zone). Available by request for special. The digital pressure switch will be equipped with the unit selection function, setting to psi initially.
∗9 For options: E1, E2, E3, E4. This product is for overseas use only according to the New Measurement Act. (The SI unit type is provided for use in Japan.)
∗10 ○: For the pipe thread type: NPT only
∗11 △: Select with options: E1, E2, E3, E4.

AR20-B to AR60-B Regulator
Made to Order

Made to Order

Please contact SMC for detailed dimensions, specifications and lead times.

AR30-03-B-X430/440/425

① Special Temperature Environment

Special materials are used in the manufacturing of seals and resin parts to allow them to withstand various temperature conditions in cold or tropical (hot) climates.

Specifications

Made-to-order part no.		-X430	-X440
Environment		Low temperature	High temperature
Ambient temperature [°C]		–30 to 60	–5 to 80
Fluid temperature [°C]		–5 to 60 (with no freezing)	
Material	**Rubber parts**	Special NBR	FKM
	Main parts	Metal (Aluminum die-cast, etc.)	

Applicable Model

Model	AR25-B	AR30-B	AR40-B	AR40-06-B	AR50-B	AR60-B
Port size	1/4, 3/8	1/4, 3/8	1/4, 3/8, 1/2	3/4	3/4, 1	1

AR 30 - ☐ 03 BG - ☐ - B - X430

❶ ❷ ❸ ❹ ❺

- Option/Semi-standard: Select one each for **a** to **g**.
- Option/Semi-standard symbol: When more than one specification is required, indicate in alphanumeric order.

Example) AR30-03BG-1NR-B-X430

For high/low temperature

X430	Low temperature
X440	High temperature

		Symbol	Description	❶ Body size 25	30	40	50	60
❷ Pipe thread type		**Nil**	Rc	●	●	●	●	●
		N	NPT	●	●	●	●	●
		F	G	●	●	●	●	●
+								
❸ Port size		**02**	1/4	●	●	●	—	—
		03	3/8	●	●	●	—	—
		04	1/2	—	—	●	—	—
		06	3/4	—	—	●	●	—
		10	1	—	—	—	●	●
+								
❹ Option*1	a Mounting	**Nil**	Without mounting option	●	●	●	●	●
		B*2	With bracket	●	●	●	●	●
		H	With set nut (for panel mount)	●	●	●	—	—
+								
	b Pressure gauge	**G***3	Round type pressure gauge (without limit indicator)	●	●	●	●	●
+								
❺ Semi-standard	c Set pressure	**Nil**	0.05 to 0.85 MPa setting	●	●	●	●	●
		1*4	0.02 to 0.2 MPa setting	●	●	●	●	●
+								
	d Exhaust mechanism	**Nil**	Relieving type	●	●	●	●	●
		N	Non-relieving type	●	●	●	●	●
+								
	e Flow direction	**Nil**	Flow direction: Left to right	●	●	●	●	●
		R	Flow direction: Right to left	●	●	●	●	●
+								
	f Knob	**Nil**	Downward	●	●	●	●	●
		Y	Upward	●	●	●	●	●
+								
	g Pressure unit	**Nil**	Name plate and pressure gauge in SI units: MPa	●	●	●	●	●
		Z*5	Name plate and pressure gauge in imperial units: psi	○*6	○*6	○*6	○*6	○*6

*1 Options B, G, H are not assembled and supplied loose at the time of shipment.
*2 Assembly of a bracket and set nuts (AR25-B to AR40-B)
Including 2 mounting screws for the AR50-B and AR60-B
*3 Mounting thread for pressure gauge: 1/8, Pressure gauge type: G43
*4 The only difference from the standard specifications is the spring for the regulator. It does not restrict the setting of 0.2 MPa or more. When the pressure gauge is attached, a 0.4 MPa pressure gauge will be fitted.
*5 For pipe thread type: NPT. This product is for overseas use only according to the new Measurement Act. (The SI unit type is provided for use in Japan.)
*6 ○: For pipe thread type: NPT only

② High Pressure

Stronger materials are used for the manufacturing of regulators intended for high-pressure operation.
The modified construction also allows for a wider set pressure range.

Specifications

Made-to-order part no.	-X425
Proof pressure [MPa]	3.0
Maximum operating pressure [MPa]	2.0
Set pressure range [MPa]	0.1 to 1.7
Ambient and fluid temperature [°C]	–5 to 60 (with no freezing)

Applicable Model

Model	AR20-B	AR25-B	AR30-B	AR40-B	AR40-06-B	AR50-B	AR60-B
Port size	1/8, 1/4	1/4, 3/8	1/4, 3/8	1/4, 3/8, 1/2	3/4	3/4, 1	1

AR 30 - ☐ 03 BG - ☐ - B - X425

❶ ❷ ❸ ❹ ❺

For high pressure

- Option/Semi-standard: Select one each for **a** to **f**.
- Option/Semi-standard symbol: When more than one specification is required, indicate in alphabetic order.

Example) AR30-03BG-NR-B-X425

		Symbol	Description	❶ Body size 20	25	30	40	50	60
❷ Pipe thread type		**Nil**	Rc	●	●	●	●	●	●
		N	NPT	●	●	●	●	●	●
		F	G	●	●	●	●	●	●
+									
❸ Port size		**01**	1/8	●	—	—	—	—	—
		02	1/4	●	●	●	●	—	—
		03	3/8	—	●	●	●	—	—
		04	1/2	—	—	—	●	—	—
		06	3/4	—	—	—	●	●	—
		10	1	—	—	—	—	●	●
+									
❹ Option*1	a Mounting	**Nil**	Without mounting option	●	●	●	●	●	●
		B*2	With bracket	●	●	●	●	●	●
		H	With set nut (for panel mount)	●	●	●	●	—	—
+									
	b Pressure gauge	**G***3	Round type pressure switch (with limit indicator)	●	●	●	●	●	●
+									
❺ Semi-standard	c Exhaust mechanism	**Nil**	Relieving type	●	●	●	●	●	●
		N	Non-relieving type	●	●	●	●	●	●
+									
	d Flow direction	**Nil**	Flow direction: Left to right	●	●	●	●	●	●
		R	Flow direction: Right to left	●	●	●	●	●	●
+									
	e Knob	**Nil**	Downward	●	●	●	●	●	●
		Y	Upward	●	●	●	●	●	●
+									
	f Pressure unit	**Nil**	Name plate and pressure gauge in SI units: MPa	●	●	●	●	●	●
		Z*4	Name plate and pressure gauge in imperial units: psi	○*5	○*5	○*5	○*5	○*5	○*5

*1 Options B, G, H are not assembled and supplied loose at the time of shipment.
*2 Assembly of a bracket and set nuts (AR20-B to AR40-B)
Including 2 mounting screws for the AR50-B and AR60-B
*3 Mounting thread for pressure gauge: 1/8, Pressure gauge type: G46-20-☐
*4 For pipe thread type: NPT. This product is for overseas use only according to the new Measurement Act. (The SI unit type is provided for use in Japan.)
*5 ○: For pipe thread type: NPT only

Regulator/*AR20-D to AR60-D*
Regulator with Backflow Function/*AR20K-D to AR60K-D*
Made to Order

Please contact SMC for detailed dimensions, specifications, and lead times.

Made to Order

② Clean Series

For details, refer to the Clean Series/Low Particle Generation section of the **Web Catalog**.

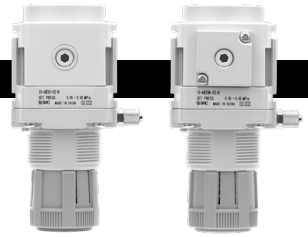

Without backflow function | With backflow function

10 - Standard model no.

- **Clean Series**

③ Copper, Fluorine and Silicone-free + Low Particle Generation

For details, refer to the Clean Series/Low Particle Generation section of the **Web Catalog**.

21 - Standard model no.

- **Copper, Fluorine and Silicone-free + Low Particle Generation**

AR-D/AW-D Series
Option

Knob Cover

Can be mounted on the knob of a regulator or filter regulator in order to prevent the accidental operation of the knob

AR 34 P – 580AS

Size

24
34
44
54

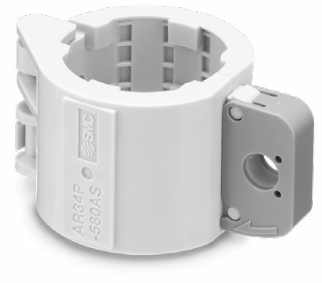

Standard Specifications

Ambient temperature	–5 to 60°C

Dimensions

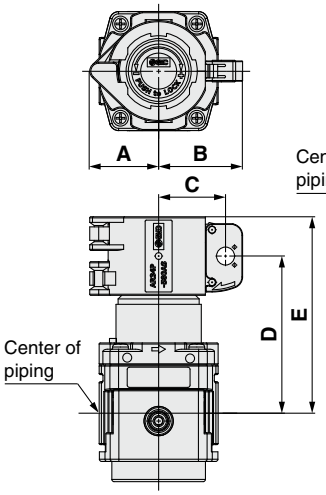

AR-D Series

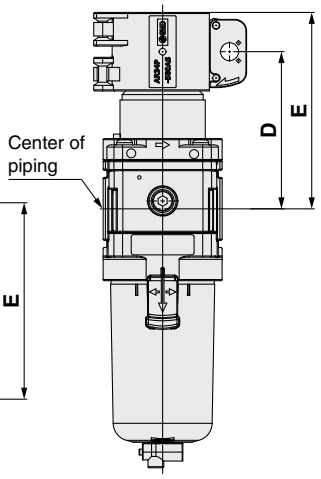

AW-D Series

Part no.	A	B	C	D	E	Applicable model
AR24P-580AS	23.5	32.1	24.5	53.1	69.1	**AR20-D**
				58.1	74.1	**AW20-D**
AR34P-580AS	30.7	37.4	29.8	70	87.5	**AR30-D, AW30-D**
AR44P-580AS	32.8	39.4	31.8	74.5	97	**AR40-D, AW40-D**
				76	98.5	**AR40-06-D, AW40-06-D**
AR54P-580AS	42	48.9	41.3	99.6	133.6	**AR50-D**
				129.6	163.6	**AR60-D, AW60-D**

Detailed dimensions of the lock hole

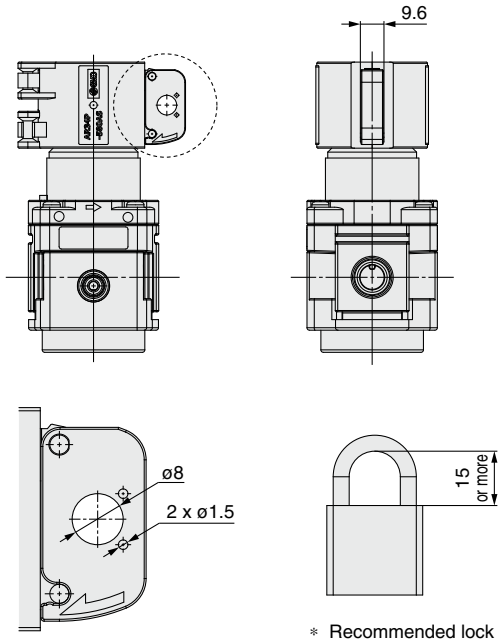

∗ Recommended lock dimensions

Mounting Precautions

Before mounting the knob cover, confirm that the knob is in the locked state (in which the orange line is not visible).
Mount the cover in accordance with the mounting instructions below.

1 Mount the knob cover on the knob.

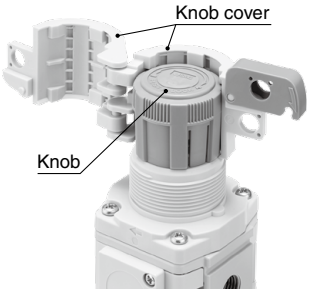

2 Close the lock cover.

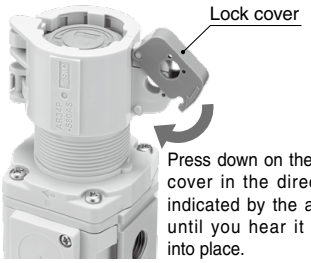

Press down on the lock cover in the direction indicated by the arrow until you hear it click into place.

3 Secure with a lock (provided by the customer).

The knob cover can be mounted facing each mounting angle in relation to the knob.

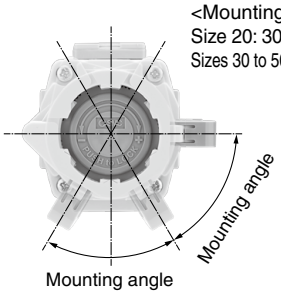

<Mounting angle>
Size 20: 30° (12 directions)
Sizes 30 to 50: 60° (6 directions)

AR(K)-D Series
Specific Product Precautions

Be sure to read this before handling the products. Refer to the back cover for safety instructions. For F.R.L. units precautions, refer to the "Handling Precautions for SMC Products" and the "Operation Manual" on the SMC website: https://www.smcworld.com

Design / Selection

⚠ Warning

1. Residual pressure disposal (outlet pressure removal) is not possible for the AR20-D to AR60-D even though the inlet pressure is exhausted. When the residual pressure disposal is performed, use the regulator with a backflow function (AR20K-D to AR60K-D).

⚠ Caution

1. When operating at an inlet pressure lower than the inlet pressure used in the flow rate characteristics graph, the pressure drop on the outlet side may be greater. Therefore, be sure to conduct testing using the actual equipment.
   For pressure control equipment selection, refer to the "Product Selection Guide."

Maintenance

⚠ Warning

1. When using the regulator with backflow function between a solenoid valve and an actuator, check the pressure gauge periodically. Sudden pressure fluctuations may shorten the durability of the pressure gauge. A digital pressure gauge is recommended for such situation or as deemed necessary.

Mounting / Adjustment

⚠ Warning

1. Set the regulator while verifying the displayed values of the inlet and outlet pressure gauges. Turning the regulator knob excessively can cause damage to the internal parts.
2. Do not use tools on the pressure regulator knob as this may cause damage. It must be operated manually.
3. **Before replacing or changing the mounting direction of the pressure gauge, or changing the direction of the scale plate, be sure to release the inlet and outlet pressure completely.**
   It is dangerous to replace or change the mounting direction of the pressure gauge, or change the direction of the scale plate, while it is under pressure.

⚠ Caution

1. Be sure to unlock the knob before adjusting the pressure and lock it after setting the pressure. Failure to follow this procedure can cause damage to the knob and the outlet pressure may fluctuate.
   - Pull the pressure regulator knob to unlock. (You can visually verify this with the "orange mark" that appears in the gap.)
   - Push the pressure regulator knob to lock. When the knob is not easily locked, turn it left and right a little and then push it (when the knob is locked, the "orange mark", i.e., the gap will disappear).

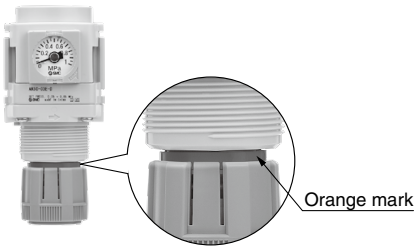

Piping

⚠ Warning

1. To screw the pressure gauge and piping materials into the pressure gauge port on the product, tighten to the recommended torque (3 to 5 N·m) while securely holding the AR(K)-D in place. Additionally, when mounting a One-touch fitting to the pressure gauge port, refer to the Fittings and Tubing Precautions.

Modular Type Lubricator

AL Series

Lubricator AL Series	Model	Port size	Options
	AL20-D	1/8, 1/4	Bracket
	AL30-D	1/4, 3/8	
	AL40-D	1/4, 3/8, 1/2	
	AL40-06-D	3/4	
	AL50-D	3/4, 1	
p. 106 to 111	**AL60-D**	1	

Lubricator
AL20-D to AL60-D

Symbol

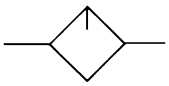

AL30-D

How to Order

AL 30 – ❷ 03 B – ❺ – D

❶ ❷ ❸ ❹ ❺

Semi-standard Symbol Selection

- Select one each for **a** to **d**.
- When more than one specification is required, indicate in alphanumeric order.

Example) AL30-F03B-3RW-D

		Symbol	Description	❶ Body size 20	30	40	50	60
❷	Pipe thread type	**Nil**	Rc	●	●	●	●	●
		N	NPT	●	●	●	●	●
		F	G	●	●	●	●	●
		+						
❸	Port size	**01**	1/8	●	—	—	—	—
		02	1/4	●	●	●	—	—
		03	3/8	—	●	●	—	—
		04	1/2	—	—	●	—	—
		06	3/4	—	—	●	●	—
		10	1	—	—	—	●	●
		+						
❹	Option (Mounting)	**Nil**	Without mounting option	●	●	●	●	●
		B∗1	With bracket	●	●	●	●	●
		+						
❺ Semi-standard	**a** Bowl∗2	**Nil**	Polycarbonate bowl	●	●	●	●	●
		2	Metal bowl	●	●	●	●	●
		6	Nylon bowl	●	●	●	●	●
		8	Metal bowl with level gauge	—	●	●	●	●
		C	With bowl guard	●	—∗3	—∗3	—∗3	—∗3
		6C	With bowl guard (Nylon bowl)	●	—∗4	—∗4	—∗4	—∗4
		+						
	b Lubricant exhaust port	**Nil**	Without drain cock	●	●	●	●	●
		3	With drain cock	●	●	●	●	●
		3W∗5	Drain cock with barb fitting	—	●	●	●	●
		+						
	c Flow direction	**Nil**	Flow direction: Left to right	●	●	●	●	●
		R	Flow direction: Right to left	●	●	●	●	●
		+						
	d Unit	**Nil**	Unit on product label: MPa, °C	●	●	●	●	●
		Z∗6	Unit on product label: psi, °F	○∗7	○∗7	○∗7	○∗7	○∗7

∗1 Option B is included in the package with the product but does not come assembled. The assembly consists of 2 types of the bracket and 2 mounting screws.
∗2 Refer to chemical data on page 111 for chemical resistance of the bowl.
∗3 A bowl guard is provided as standard equipment (polycarbonate).
∗4 A bowl guard is provided as standard equipment (nylon).
∗5 The combination of metal bowl 2 and 8 is not available.
∗6 For the pipe thread type: NPT
This product is for overseas use only according to the New Measurement Act. (The SI unit type is provided for use in Japan.)
∗7 ○: For the pipe thread type: NPT only

AL20-D to AL60-D Series

Standard Specifications

Model	AL20-D	AL30-D	AL40-D	AL40-06-D	AL50-D	AL60-D
Port size	1/8, 1/4	1/4, 3/8	1/4, 3/8, 1/2	3/4	3/4, 1	1
Fluid	Air					
Ambient and fluid temperatures	–5 to 60°C (No freezing)					
Proof pressure	1.5 MPa					
Max. operating pressure	1.0 MPa					
Min. dripping flow rate∗1	15 L/min (ANR)	Port size 1/4: 30 L/min (ANR) Port size 3/8: 40 L/min (ANR)	Port size 1/4: 30 L/min (ANR) Port size 3/8: 40 L/min (ANR) Port size 1/2: 50 L/min (ANR)	50 L/min (ANR)	190 L/min (ANR)	220 L/min (ANR)
Oil capacity	25 cm^3	55 cm^3	135 cm^3			
Recommended lubricant	Class 1 turbine oil (ISO VG32)					
Bowl material	Polycarbonate					
Bowl guard	Semi-standard (Steel)	Standard (Polycarbonate)				
Weight	0.10 kg	0.18 kg	0.37 kg	0.41 kg	0.92 kg	0.99 kg

∗1 The flow rate is 5 drops or greater/min under the following conditions: Inlet pressure of 0.5 MPa; Class 1 turbine oil (ISO VG32); Temperature at 20°C; Oil adjustment valve fully open. For a circuit that repeatedly turns ON and OFF on the outlet side, make the adjustment so that the average air consumption per minute becomes the minimum dripping flow rate or more.

Bowl Assembly/Part Nos.

Bowl material	Lubricant exhaust port	Other	Model					
			AL20-D	**AL30-D**	**AL40-D**	**AL40-06-D**	**AL50-D**	**AL60-D**
Polycarbonate	Without drain cock	—	C2SL-D	—	—			
		With bowl guard	C2SL-C-D	C3SL-D	C4SL-D			
	With drain cock	—	C2SL-3-D	—	—			
		With bowl guard	C2SL-3C-D	C3SL-3-D	C4SL-3-D			
	Drain cock with barb fitting	With bowl guard	—	C3SL-3W-D	C4SL-3W-D			
Nylon	Without drain cock	—	C2SL-6-A	—	—			
		With bowl guard	C2SL-6C-A	C3SL-6-D	C4SL-6-D			
	With drain cock	—	C2SL-36-A	—	—			
		With bowl guard	C2SL-36C-A	C3SL-36-D	C4SL-36-D			
	Drain cock with barb fitting	With bowl guard	—	C3SL-36W-D	C4SL-36W-D			
Metal	Without drain cock	—	C2SL-2-A	C3SL-2-A	C4SL-2-A			
		With level gauge	—	C3LL-8-A	C4LL-8-A			
	With drain cock	—	C2SL-23-A	C3SL-23-A	C4SL-23-A			
		With level gauge	—	C3LL-38-A	C4LL-38-A			

∗1 The bowl assembly comes with a bowl seal. Please contact SMC separately for psi and °F unit display specifications.

Option/Part Nos.

Optional specifications	Model					
	AL20-D	**AL30-D**	**AL40-D**	**AL40-06-D**	**AL50-D**	**AL60-D**
Bracket assembly∗1	AF24P-070AS	AF34P-070AS	AF44P-070AS	AF49P-070AS	AF54P-070AS	

∗1 The assembly consists of a bracket A/B and 2 mounting screws.

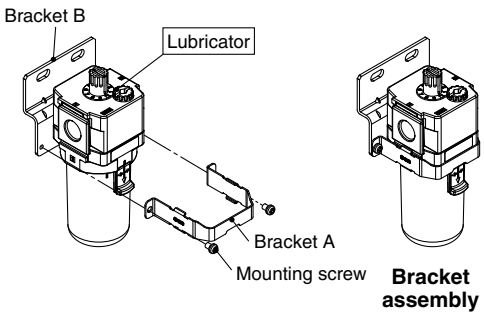

Replacement Parts

Description	Part no.					
	AL20-D	**AL30-D**	**AL40-D**	**AL40-06-D**	**AL50-D**	**AL60-D**
Sight dome assembly	AL20P-080AS					
Lubrication plug assembly	AL24P-060AS	AL34P-060AS	AL44P-060AS			
Damper retainer assembly	AL20P-030AS	AL30P-030AS	AL40P-030AS		AL54P-030AS	AL60P-030AS
Damper assembly	AL20P-040S	AL30P-040S	AL44P-040S		AL60P-040AS	
Bowl seal	C2SFP-260S	C32FP-260S	C42FP-260S			
Bowl assembly∗1, ∗2	Refer to “Bowl Assembly/Part Nos.”					

∗1 The bowl assembly comes with a bowl seal.
∗2 Please contact SMC separately for psi and °F unit display specifications.

Flow Rate Characteristics (Representative values)

AL20-D

Rc1/4

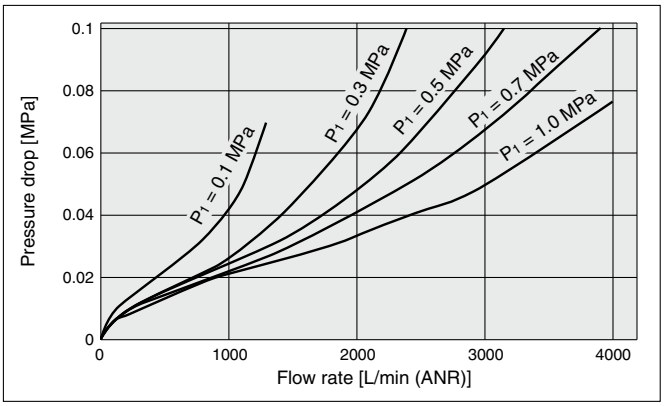

AL30-D

Rc3/8

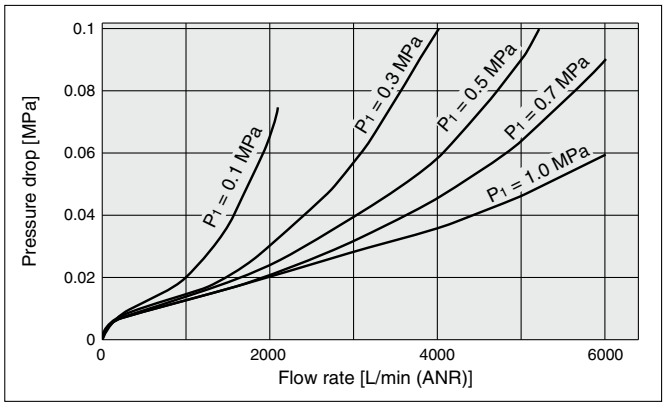

AL40-D

Rc1/2

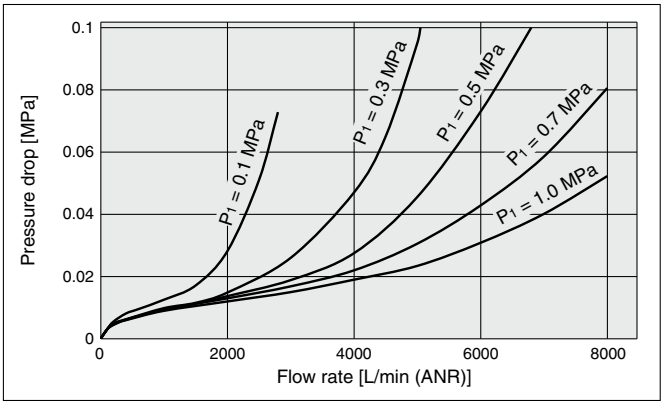

AL40-06-D

Rc3/4

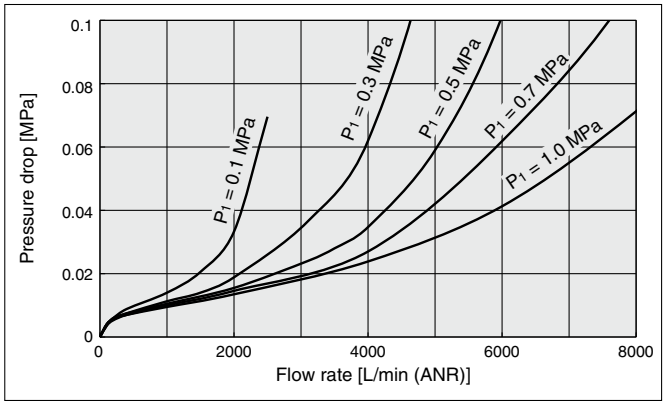

AL50-D

Rc1

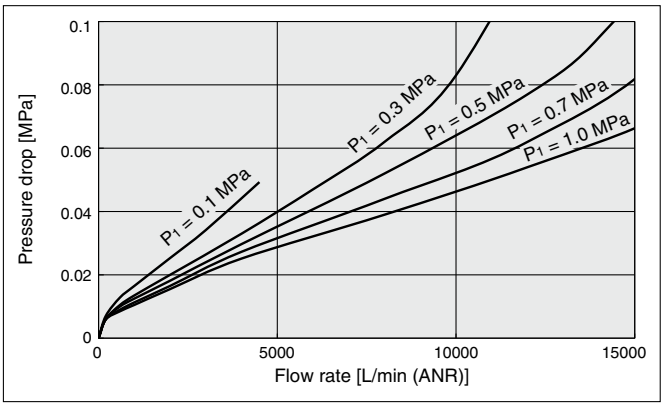

AL60-D

Rc1

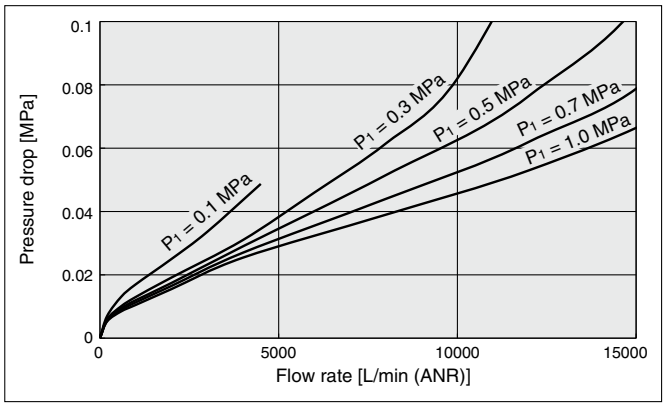

Dimensions

AL20-D

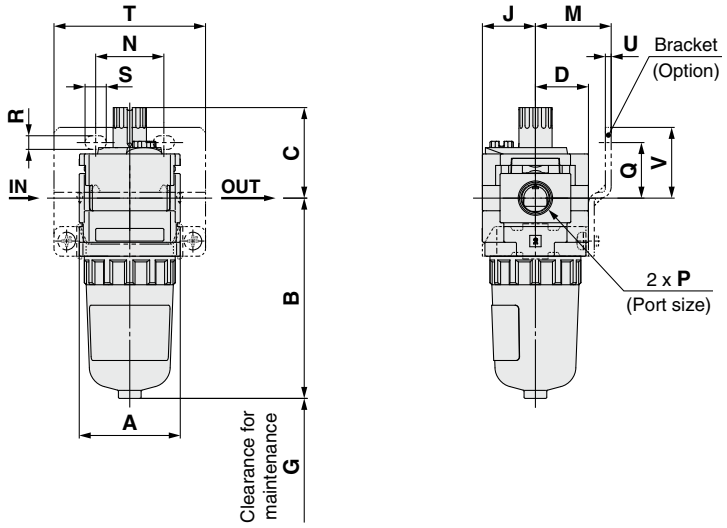

AL30-D to AL40-06-D

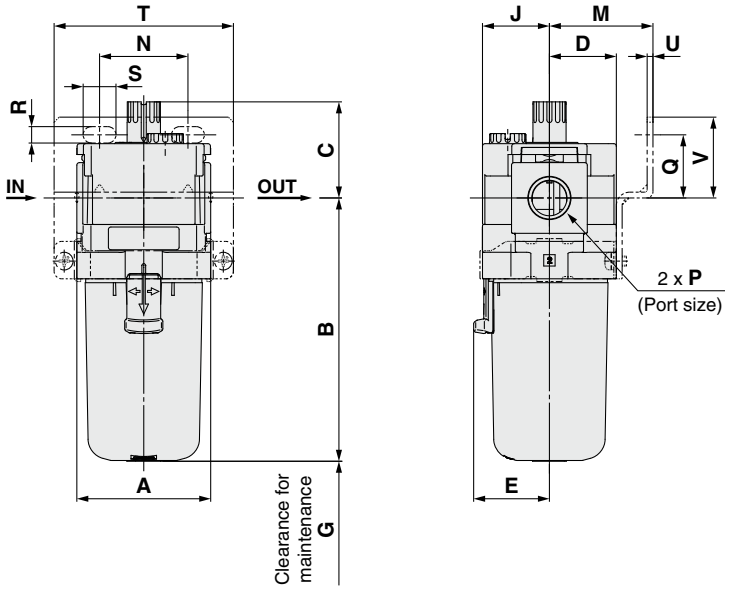

AL50-D to AL60-D

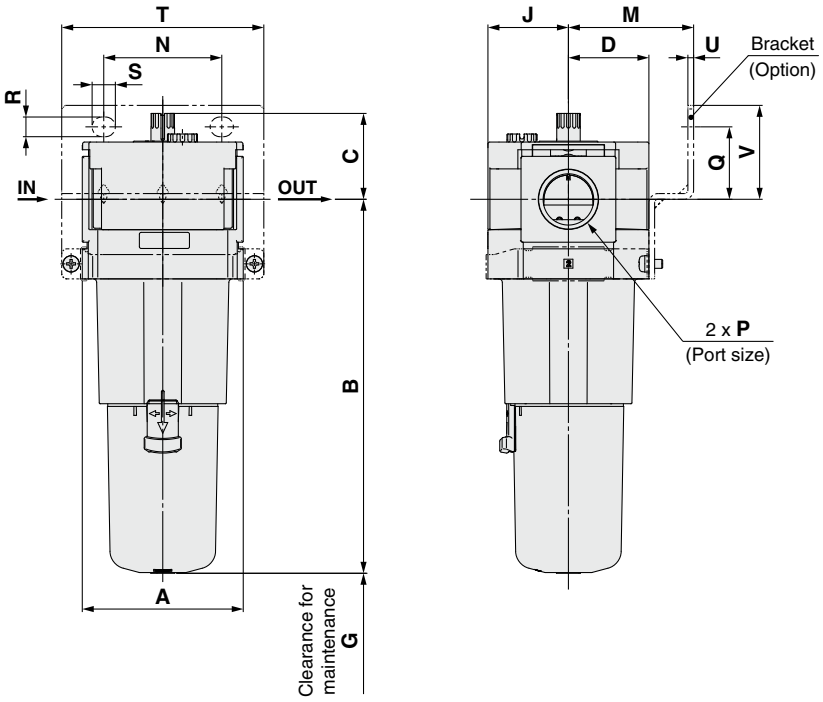

Applicable model	Semi-standard					
	PC/PA bowl		Metal bowl		Metal bowl with level gauge	
	With drain cock	Drain cock with barb fitting	Without drain cock	With drain cock	Without drain cock	With drain cock
AL20-D	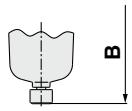		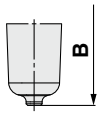	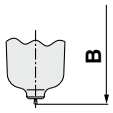		
AL30-D to AL60-D	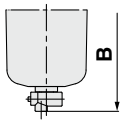	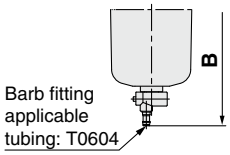	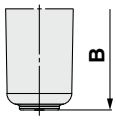	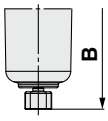	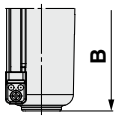	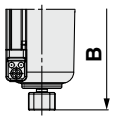

Model	Standard specifications								Optional specifications							
									Bracket mount							
	P	**A**	**B**	**C**	**D**	**E**	**G**	**J**	**M**	**N**	**Q**	**R**	**S**	**T**	**U**	**V**
AL20-D	1/8, 1/4	40	79.3	35.9	21	—	60	21	30	27	22	5.4	8.4	60	2.3	28
AL30-D	1/4, 3/8	53	104.3	38.1	26.5	30	80	26.5	41	35	25	6.5	13	71	2.3	32
AL40-D	1/4, 3/8, 1/2	70	136.1	44	35.5	38.4	110	35.5	50	52	30	8.5	12.5	88	2.3	39
AL40-06-D	3/4	75	138.1	44	35.5	38.4	110	35.5	50	52	34	8.5	12.5	88	2.3	43
AL50-D	3/4, 1	90	209.1	48	45	—	110	45	70	66	40.5	11	13	113	3.2	52.5
AL60-D	1	95	223.1	48	45	—	110	45	70	66	40.5	11	13	113	3.2	52.5

Model	Semi-standard specifications					
	PC/PA bowl		Metal bowl		Metal bowl with level gauge	
	With drain cock	With barb fitting	Without drain cock	With drain cock	Without drain cock	With drain cock
	B	**B**	**B**	**B**	**B**	**B**
AL20-D	87.6	—	84.5	87.4	—	—
AL30-D	115.4	123.9	104.3	117.8	124.3	137.8
AL40-D	147.1	155.6	136	149.5	156.1	169.5
AL40-06-D	149.1	157.6	138	151.5	158.1	171.5
AL50-D	220.1	228.6	209	222.5	229	242.5
AL60-D	234.1	242.6	223	236.5	243	256.5

AL-D Series
Specific Product Precautions

Be sure to read this before handling the products. Refer to the back cover for safety instructions. For F.R.L. units precautions, refer to the "Handling Precautions for SMC Products" and the "Operation Manual" on the SMC website: https://www.smcworld.com

Design / Selection

⚠ Warning

1. Do not introduce air from the outlet side as this can damage the damper.
2. **The standard bowl and sight dome of the lubricator is polycarbonate. Do not use in an environment where they are exposed to or come in contact with organic solvents, chemicals, cutting oil, synthetic oil, alkali, and thread lock solutions.**

Chemical resistance of polycarbonate bowl with sight dome and nylon bowl with sight dome

Type	Chemical name	Application examples	Material	
			Polycarbonate	Nylon
Acid	Hydrochloric acid Sulfuric acid Phosphoric acid Chromic acid	Acid washing liquid for metals	△	×
Alkaline	Sodium hydroxide (Caustic soda) Potash Calcium hydroxide (Slack lime) Ammonia water Sodium carbonate	Degreasing of metals Industrial salts Water-soluble cutting oil	×	○
Inorganic salts	Sodium sulfide Potassium nitrate Sodium sulfate	—	×	△
Chlorine solvents	Carbon tetrachloride Chloroform Ethylene chloride Methylene chloride	Cleansing liquid for metals Printing ink Dilution	×	△
Aromatic series	Benzene Toluene Paint thinner	Coatings Dry cleaning	×	△
Ketone	Acetone Methyl ethyl ketone Cyclohexane	Photographic film Dry cleaning Textile industries	×	×
Alcohol	Ethyl alcohol IPA Methyl alcohol	Antifreeze Adhesives	△	×
Oil	Gasoline Kerosene	—	×	○
Ester	Phthalic acid dimethyl Phthalic acid diethyl Acetic acid	Synthetic oil Anti-rust additives	×	○
Ether	Methyl ether Ethyl ether	Brake oil additives	×	○
Amino	Methyl amino	Cutting oil Brake oil additives Rubber accelerator	×	×
Others	Thread-lock fluid Seawater Leak tester	—	×	△

○: Essentially safe △: Some effects may occur. ×: Effects will occur.

When the above factors are present, or there is some doubt, use a metal bowl for safety.

Design / Selection

⚠ Caution

1. When the piping is branched on the inlet side, install a check valve to prevent the lubricant from back flowing.

Maintenance

⚠ Warning

1. For the AL20-D, replenish the lubricant after releasing the inlet pressure. Lubrication cannot take place under a pressurized condition.
2. Tighten the lubrication plug to the recommended tightening torque. Insufficient tightening torque may cause loosening or defective sealing. Excessive tightening torque may damage the thread, etc.

Recommended Torque Unit: N·m

Model	AL20-D	AL30-D	AL40-D AL40-06-D AL50-D AL60-D
Torque	0.25 to 0.35	0.35 to 0.45	0.5 to 0.6

3. Adjustment of the oil regulating valve (sight dome assembly) for models from the AL20-D to AL60-D should be carried out manually. Turning it counterclockwise increases the dripping amount, and turning it clockwise reduces the dripping amount. The use of tools can result in damage to the unit. From the fully closed position, three rotations will bring it to the fully open position. Do not rotate it any further than this. Note that the numbered scale markings are guidelines for adjusting the position, and not indicators of the dripping amount.

Mounting / Adjustment

⚠ Caution

1. When the lubricator bowl is installed on the AL30-D to AL60-D, install them so that the lock button lines up to the groove of the front (or the back) of the body to avoid drop or damage of the bowl.

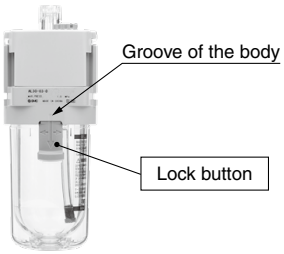

Modular Type Filter Regulator
AW Series

Filter Regulator AW Series	Model	Port size	Set pressure	Options
	AW20(K)-D	1/8, 1/4	0.05 to 0.85 MPa 0.02 to 0.2 MPa	Bracket Set nut (for panel mount) Float type auto drain Square embedded type pressure gauge Digital pressure switch Round type pressure gauge
	AW30(K)-D	1/4, 3/8		
	AW40(K)-D	1/4, 3/8, 1/2		
	AW40(K)-06-D	3/4		
	AW60(K)-D	3/4, 1		Bracket Float type auto drain Square embedded type pressure gauge Digital pressure switch Round type pressure gauge

p. 113 to 129

Filter Regulator
AW20-D to AW60-D
Filter Regulator with Backflow Function
AW20K-D to AW60K-D

Symbol

Filter Regulator

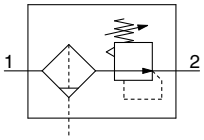

Filter Regulator with Backflow Function

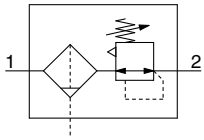

- **Integrated filter and regulator units save space and require less piping.**
- **Models with the backflow function include a mechanism which allows for the air pressure in the outlet side to be released to the inlet side.**

Example)
When the air supply is cut off and releasing the inlet pressure to the atmosphere, the residual pressure release of the outlet side can be ensured.

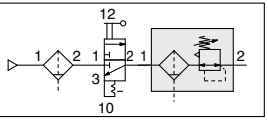

How to Order

AW 30 ❶ ❷ – ❸ 03 ❹ BE ❺ – ❻ – D

Option and Semi-standard Symbol Selection

- Select one each for **a** to **i**.
- When more than one specification is required, indicate in alphanumeric order.

Example) AW30K-F03BE-1NR-D

				Symbol	Description	❶ Body size 20	30	40	60
❷	With backflow function			**Nil**	Without backflow function	●	●	●	●
				K[*1]	With backflow function	●	●	●	●
				+					
❸	Pipe thread type			**Nil**	Rc	●	●	●	●
				N	NPT	●	●	●	●
				F	G	●	●	●	●
				+					
❹	Port size			**01**	1/8	●	—	—	—
				02	1/4	●	●	●	—
				03	3/8	—	●	●	—
				04	1/2	—	—	●	—
				06	3/4	—	—	●	●
				10	1	—	—	—	●
				+					
❺	Option[*2]	**a**	Mounting	**Nil**	Without mounting option	●	●	●	●
				B[*3]	With bracket	●	●	●	●
				H	With set nut (for panel mount)	●	●	●	—
				+					
		b	Float type auto drain[*4]	**Nil**	Without auto drain	●	●	●	●
				C[*5]	N.C. (Normally closed) Drain port is closed when pressure is not applied.	●	●	●	●
				D[*6]	N.O. (Normally open) Drain port is open when pressure is not applied.	—	●	●	●
				+					
		c	Pressure gauge[*7, *8]	**Nil**	Without pressure gauge	●	●	●	●
				E	Square embedded type pressure gauge (with limit indicator)	●	●	●	●
				G	Round type pressure gauge (with limit indicator)	●	●	●	●
				M	Round type pressure gauge (with color zone)	●	●	●	●
			Digital pressure switch[*9]	**E1**	Output: NPN output, Electrical entry: Wiring bottom entry	●	●	●	●
				E2	Output: NPN output, Electrical entry: Wiring top entry	●	●	●	●
				E3	Output: PNP output, Electrical entry: Wiring bottom entry	●	●	●	●
				E4	Output: PNP output, Electrical entry: Wiring top entry	●	●	●	●
				+					
❻	Semi-standard	**d**	Set pressure[*10]	**Nil**	0.05 to 0.85 MPa setting	●	●	●	●
				1	0.02 to 0.2 MPa setting	●	●	●	●
				+					
		e	Bowl[*11]	**Nil**	Polycarbonate bowl	●	●	●	●
				2	Metal bowl	●	●	●	●
				6	Nylon bowl	●	●	●	●
				8	Metal bowl with level gauge	—	●	●	●
				C	With bowl guard	●	—[*12]	—[*12]	—[*12]
				6C	With bowl guard (Nylon bowl)	●	—[*13]	—[*13]	—[*13]
				+					
		f	Drain port[*14]	**Nil**	With drain cock	●	●	●	●
				J[*15]	Drain guide 1/8	●	—	—	—
					Drain guide 1/4	—	●	●	●
				W[*16]	Drain cock with barb fitting	—	●	●	●

AW30-D

			Symbol	Description	❶ Body size 20	30	40	60
❻ Semi-standard	g	Exhaust mechanism	**Nil**	Relieving type	●	●	●	●
			N	Non-relieving type	●	●	●	●
			+					
	h	Flow direction	**Nil**	Flow direction: Left to right	●	●	●	●
			R	Flow direction: Right to left	●	●	●	●
			+					
	i	Unit	**Nil**	Unit on product label: MPa, °C, Pressure gauge in SI units: MPa	●	●	●	●
			Z∗17	Unit on product label: psi, °F, Pressure gauge: MPa/psi dual scale	○∗19	○∗19	○∗19	○∗19
			ZA∗18	Digital pressure switch: With unit selection function	△∗20	△∗20	△∗20	△∗20

∗1 Set the inlet pressure to at least 0.05 MPa higher than the set pressure.
∗2 Options B, G, H, and M are not assembled and supplied loose at the time of shipment.
∗3 The assembly consists of a bracket and set nuts (applicable to the AW20(K)-D to AW40(K)-D).
For the AW60(K)-D, the assembly consists of 2 types of the bracket and 2 mounting screws.
∗4 The auto drain port is ø10 One-touch fitting (❸ Pipe thread type: Rc, G) or ø3/8" One-touch fitting (❸ Pipe thread type: NPT)
∗5 When pressure is not applied, condensate which does not start the auto drain mechanism will be left in the bowl. Releasing the residual condensate before ending operations for the day is recommended.
∗6 If the compressor is small (0.75 kW, discharge flow is less than 100 L/min (ANR)), air leakage from the drain cock may occur during the start of operations. N.C. type is recommended.
∗7 When the pressure gauge is attached, a 1.0 MPa pressure gauge will be fitted for standard (0.85 MPa) type. 0.4 MPa pressure gauge for 0.2 MPa type.
∗8 When the type without a backflow function + no pressure gauge or pressure gauge "G" or "M" is selected, it is not possible to change to an "E," "J," "E1," "E2," "E3," or "E4" later.
When the type with a backflow function is selected, it is possible to change the pressure gauge later.
∗9 When choosing with H (panel mount), the installation space for lead wires will not be secured. In this case, select "wiring bottom entry" for the electrical entry.
∗10 Pressure can be set higher than the specification pressure in some cases, but use pressure within the specification range.
∗11 Refer to chemical data on page 129 for chemical resistance of the bowl.
∗12 A bowl guard is provided as standard equipment (polycarbonate).
∗13 A bowl guard is provided as standard equipment (nylon).
∗14 The combination of float type auto drain C and D is not available.
∗15 Without a valve function. The mounting screws are the same as the thread of ❸.
∗16 The combination of metal bowl 2 and 8 is not available.
∗17 For the pipe thread type: NPT. This product is for overseas use only according to the New Measurement Act. (The SI unit type is provided for use in Japan.)
Cannot be used with M: Round type pressure gauge (with color zone). Available by request for special. The digital pressure switch will be equipped with the unit selection function, setting to psi initially.
∗18 For options: E1, E2, E3, E4
This product is for overseas use only according to the New Measurement Act. (The SI unit type is provided for use in Japan.)
∗19 ○: For the pipe thread type: NPT only
∗20 △: Select with options: E1, E2, E3, E4.

AW20-D to AW60-D Series
AW20K-D to AW60K-D Series

Standard Specifications

Model		AW20-D	AW30-D	AW40-D	AW40-06-D	AW60-D
Port size		1/8, 1/4	1/4, 3/8	1/4, 3/8, 1/2	3/4	3/4, 1
Pressure gauge port size∗1		1/8				
Fluid		Air				
Ambient and fluid temperatures∗2		–5 to 60°C (No freezing)				
Proof pressure		1.5 MPa				
Max. operating pressure		1.0 MPa				
Auto drain minimum operating pressure	**N.C.**	0.1 MPa	0.15 MPa			
	N.O.	—	0.1 MPa			
Set pressure range		0.05 to 0.85 MPa				
Nominal filtration rating∗3		5 µm				
Compressed air purity class∗4		ISO 8573-1:2010 [6 : 4 : 4]∗5				
Drain capacity		8 cm^3	25 cm^3	45 cm^3		
Bowl material		Polycarbonate				
Bowl guard		Semi-standard (Steel)	Standard (Polycarbonate)			
Construction		Relieving type				
Weight		0.18 kg	0.34 kg	0.64 kg	0.69 kg	1.76 kg

∗1 Pressure gauge connection threads are not available for F.R.L. unit with a square embedded type pressure gauge or with a digital pressure switch.
∗2 –5 to 50°C for the products with the digital pressure switch
∗3 For the following conditions in accordance with [Test condition: ISO 8573-4:2001 compliant, Test method ISO 12500-3:2009 compliant]
Conditions: When a new element is used, and the flow capacity, inlet pressure, and the amount of solid bodies on the filter inlet side are stable
∗4 The compressed air purity class is indicated based on ISO 8573-1:2010 Compressed air – Part 1: Contaminants and purity classes.
For details on this standard, refer to page 131.
∗5 The compressed air quality class on the inlet side is [7 : 4 : 4].

Bowl Assembly/Part Nos.

Bowl material	Drain discharge mechanism	Drain port	Other	Model				
				AW20-D	**AW30-D**	**AW40-D**	**AW40-06-D**	**AW60-D**
Polycarbonate	Manual	With drain cock	—	C2SF-D	—	—		
			With bowl guard	C2SF-C-D	C3SF-D	C4SF-D		
		Drain cock with barb fitting	With bowl guard	—	C3SF-W-D	C4SF-W-D		
		With drain guide (without valve function)	—	C2SF□-J-D	—	—		
			With bowl guard	C2SF□-CJ-D	C3SF□-J-D	C4SF□-J-D		
	Automatic (Auto drain)	Normally closed (N.C.)	—	AD27-D	—	—		
			With bowl guard	AD27-C-D	AD37□-D	AD47□-D		
		Normally open (N.O.)	With bowl guard	—	AD38□-D	AD48□-D		
Nylon	Manual	With drain cock	—	C2SF-6-A	—	—		
			With bowl guard	C2SF-6C-A	C3SF-6-D	C4SF-6-D		
		Drain cock with barb fitting	With bowl guard	—	C3SF-6W-D	C4SF-6W-D		
		With drain guide (without valve function)	—	C2SF□-6J-A	—	—		
			With bowl guard	C2SF□-6CJ-A	C3SF□-6J-D	C4SF□-6J-D		
	Automatic (Auto drain)	Normally closed (N.C.)	—	AD27-6-A	—	—		
			With bowl guard	AD27-6C-A	AD37□-6-D	AD47□-6-D		
		Normally open (N.O.)	With bowl guard	—	AD38□-6-D	AD48□-6-D		
Metal	Manual	With drain cock	—	C2SF-2-A	C3SF-2-A	C4SF-2-A		
			With level gauge	—	C3LF-8-A	C4LF-8-A		
		With drain guide (without valve function)	—	C2SF□-2J-A	C3SF□-2J-A	C4SF□-2J-A		
			With level gauge	—	C3LF□-8J-A	C4LF□-8J-A		
	Automatic (Auto drain)	Normally closed (N.C.)	—	AD27-2-A	AD37□-2-A	AD47□-2-A		
			With level gauge	—	AD37□-8-A	AD47□-8-A		
		Normally open (N.O.)	—	—	AD38□-2-A	AD48□-2-A		
			With level gauge	—	AD38□-8-A	AD48□-8-A		

∗1 The bowl assembly comes with a bowl seal.
□ in bowl assembly part numbers indicates a pipe thread type (applicable tubing for auto drain).
No indication is necessary for Rc thread; however, indicate N for NPT thread, and F for G thread (For auto drain, Nil: ø10, N: ø3/8").
Please contact SMC separately for psi and °F unit display specifications.

Option/Part Nos.

Optional specifications			Model				
			AW20(K)-D	**AW30(K)-D**	**AW40(K)-D**	**AW40(K)-06-D**	**AW60(K)-D**
Bracket assembly∗1			AW23P-270AS	AR33P-270AS	AR43P-270AS		AR54P-270AS
Set nut			AR23P-260S	AR33P-260S	AR43P-260S		—∗2
Pressure gauge∗3	**Round type**	**Standard**	G36-10-□01		G46-10-□01		
		0.02 to 0.2 MPa setting	G36-4-□01		G46-4-□01		
	Round type (with color zone)	**Standard**	G36-10-□01-L		G46-10-□01-L		
		0.02 to 0.2 MPa setting	G36-4-□01-L		G46-4-□01-L		
	Square embedded type∗4	**Standard**	GC3-10AS-D [GC3P-030AS (Pressure gauge cover only)]				
		0.02 to 0.2 MPa setting	GC3-4AS-D [GC3P-030AS (Pressure gauge cover only)]				
Digital pressure switch		**NPN output, Wiring bottom entry**	ISE35-N-25-MLA-X523 [ISE35-N-25-M (Switch body only)]∗5				
		NPN output, Wiring top entry	ISE35-R-25-MLA-X523 [ISE35-R-25-M (Switch body only)]∗5				
		PNP output, Wiring bottom entry	ISE35-N-65-MLA-X523 [ISE35-N-65-M (Switch body only)]∗5				
		PNP output, Wiring top entry	ISE35-R-65-MLA-X523 [ISE35-R-65-M (Switch body only)]∗5				

∗1 The assembly consists of a bracket and set nuts. For the AW60(K)-D, the assembly consists of a bracket A/B and 2 mounting screws.
∗2 Please contact SMC regarding the set nuts for the AW60(K)-D.
∗3 □ in part numbers for a round type pressure gauge indicates a pipe thread type. No indication is necessary for R; however, indicate N for NPT. Please contact SMC regarding the pressure gauge supply for both MPa and psi unit specifications.
∗4 Including one O-ring and 2 mounting screws. [ ]: Pressure gauge cover only
∗5 In addition to the pressure switch body, lead wire with connector (2 m), adapter, lock pin, O-ring (1 pc.), mounting screws (2 pcs.) are attached.
[ ]: Switch body only (Regarding how to order the digital pressure switch, refer to page 130.)

AW20(K)-D to AW40(K)-06-D

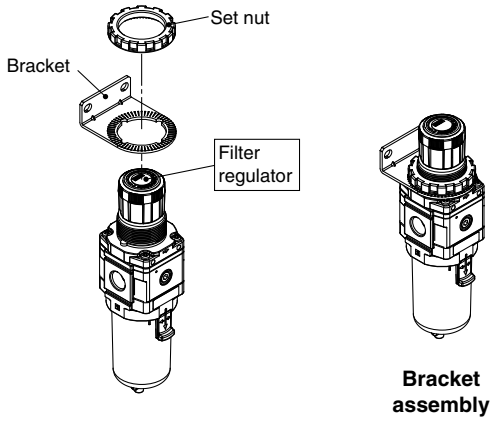

AW60(K)-D

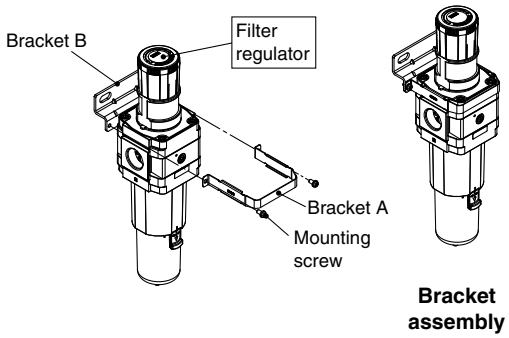

Replacement Parts

Description		Part no.				
		AW20(K)-D	**AW30(K)-D**	**AW40(K)-D**	**AW40(K)-06-D**	**AW60(K)-D**
Valve assembly		AW24P-060AS	AW34P-060AS	AW44P-060AS	AW49P-060AS	AW64P-060AS
Filter element		AF20P-060S	AF30P-060S	AF40P-060S		AW60P-060S
Baffle		AF24P-040S	AF34P-040S	AF44P-040S		AW64P-030S
Diaphragm assembly	**Relieving type**	AR24P-150AS	AR34P-150AS	AR44P-150AS		AR54P-150AS
	Non-relieving type	AR24P-150AS-N	AR34P-150AS-N	AR44P-150AS-N		AR54P-150AS-N
Bowl seal		C2SFP-260S	C32FP-260S	C42FP-260S		
Bowl assembly∗1, ∗2		Refer to “Bowl Assembly/Part Nos.”				
Check valve assembly∗3		AR24KP-020AS				

∗1 The bowl assembly comes with a bowl seal.
∗2 Please contact SMC separately for psi and °F unit display specifications.
∗3 The check valve assembly is applicable for a filter regulator with backflow function (AW20K-D to AW60K-D) only. The assembly consists of a check valve cover, check valve body assembly, and 2 mounting screws.

Flow Rate Characteristics (Representative values)

——— Inlet pressure: 1.0 MPa
- - - Inlet pressure: 0.7 MPa

AW20(K)-D

Rc1/4

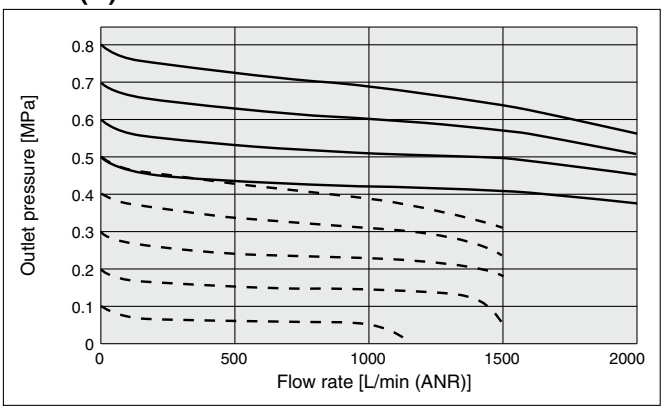

AW30(K)-D

Rc3/8

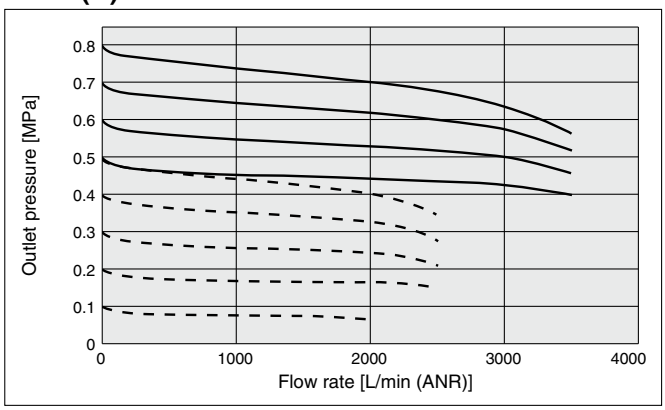

AW40(K)-D

Rc1/2

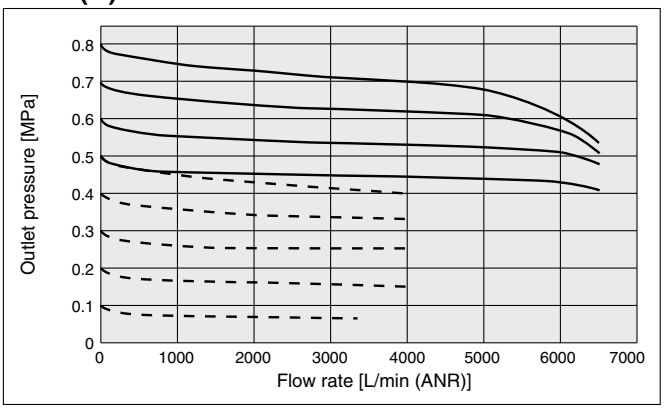

AW40(K)-06-D

Rc3/4

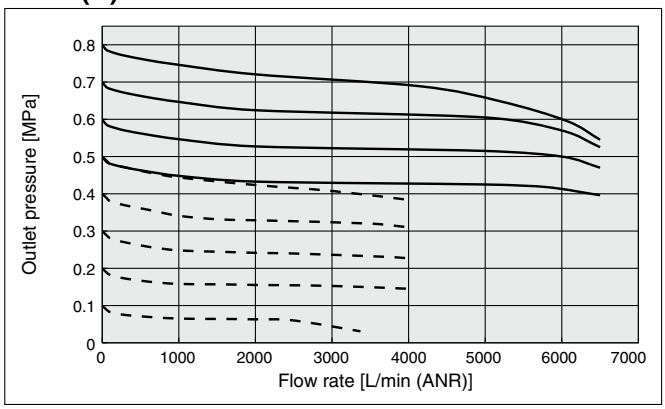

AW60(K)-D

Rc1

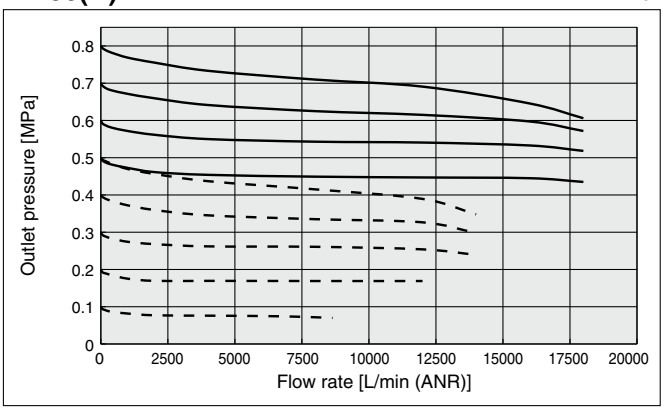

Pressure Characteristics (Representative values)

Conditions: Inlet pressure of 0.7 MPa, Outlet pressure of 0.2 MPa, Flow rate 20 L/min (ANR)

AW20(K)-D

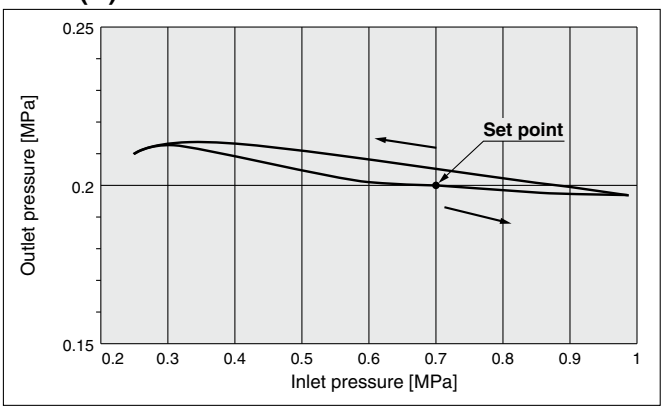

AW30(K)-D

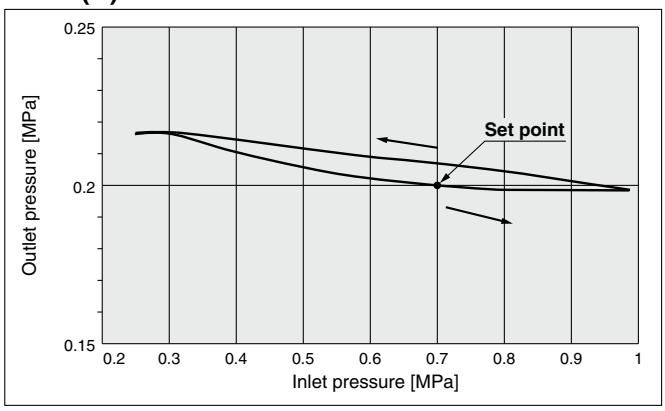

AW40(K)-D

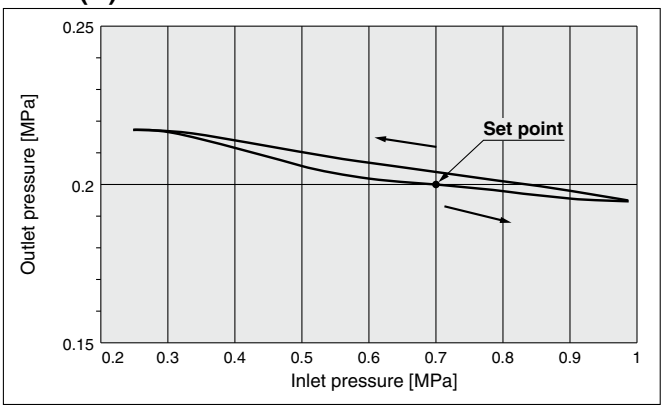

AW40(K)-06-D

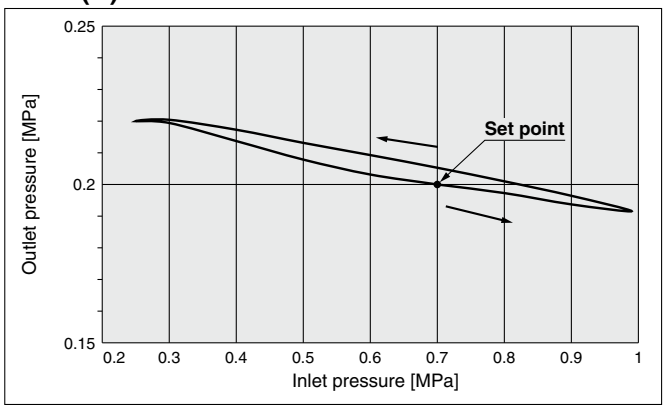

AW60(K)-D

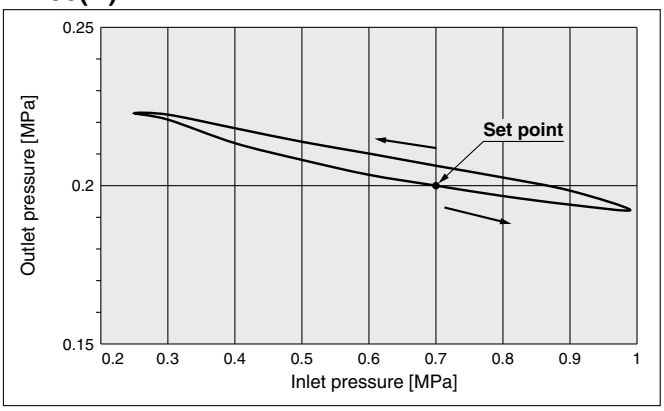

Dimensions

Standard (Round Type Pressure Gauge)

AW20-D

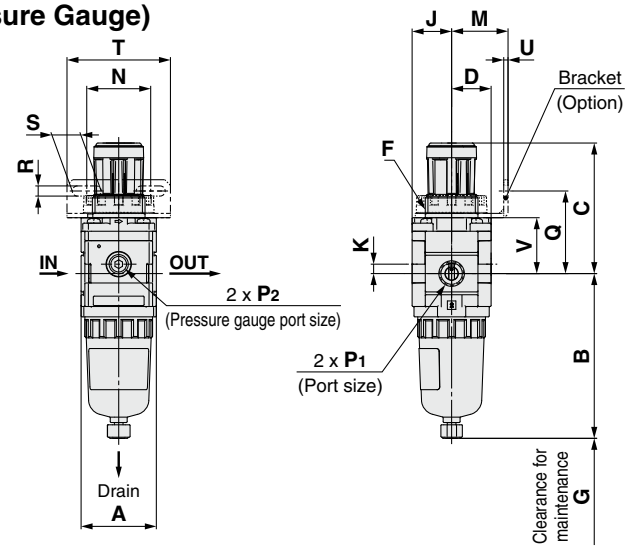

Panel cutout dimensions

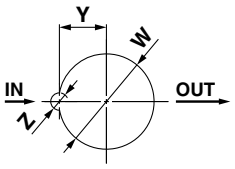

Plate thickness
AW20-D to AW30-D : Max. 3.5
AW40-D to AW40-06-D: Max. 5

AW30-D to AW40-06-D

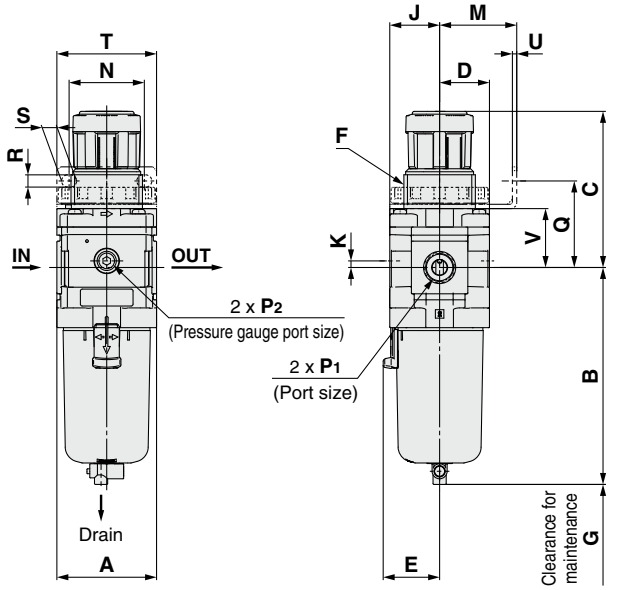

AW60-D

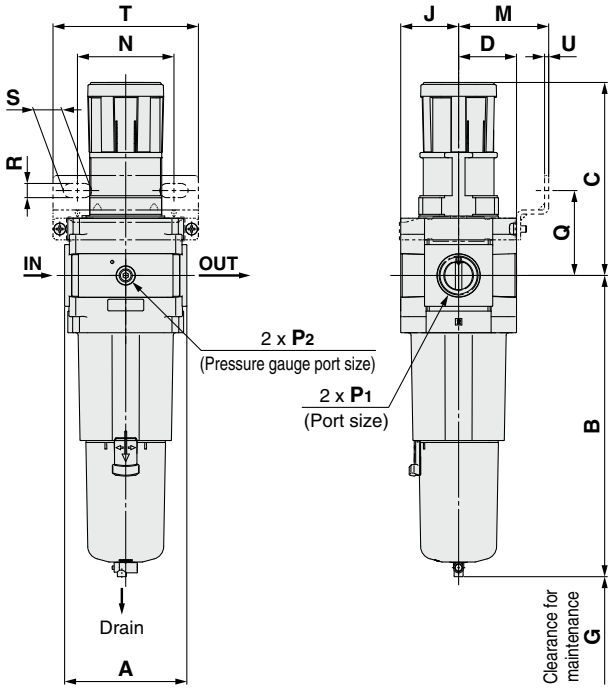

Round type pressure gauge

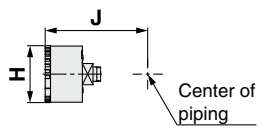

Applicable model	Optional specifications	Semi-standard					
	With auto drain	PC/PA bowl		Metal bowl		Metal bowl with level gauge	
		Drain cock with barb fitting	With drain guide	With drain cock	With drain guide	With drain cock	With drain guide
AW20-D	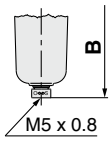		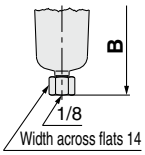	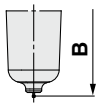	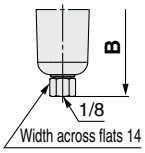		
AW30-D to AW60-D	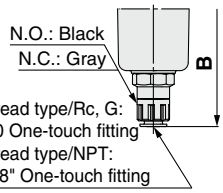	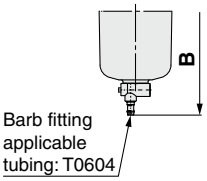	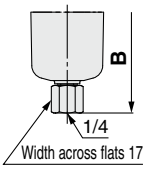	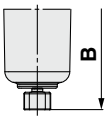	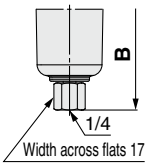	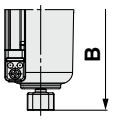	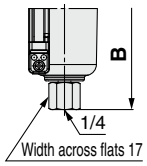

Model	Standard specifications											Optional specifications			
												Round type pressure gauge		Round type pressure gauge (with color zone)	
	P_1	P_2	A	B	C*1	D	E	F	G	J	K	H	J	H	J
AW20-D	1/8, 1/4	1/8	40	87.6	71.8	21	—	M28 x 1	40	21	5	ø37.5	57.5	ø37.5	58.5
AW30-D	1/4, 3/8	1/8	53	115.4	86.5	26.5	30	M38 x 1.5	55	26.5	3.5	ø37.5	63	ø37.5	64
AW40-D	1/4, 3/8, 1/2	1/8	70	147.1	91.5	35.5	38.4	M42 x 1.5	80	35.5	—	ø42.5	73	ø42.5	73
AW40-06-D	3/4	1/8	75	149.1	93	35.5	38.4	M42 x 1.5	80	35.5	—	ø42.5	73	ø42.5	73
AW60-D	3/4, 1	1/8	95	234.1	155	45	—	—	30	45	—	ø42.5	82.5	ø42.5	82.5

Model	Optional specifications												Semi-standard					
	Bracket mount							Panel mount				With auto drain	PC/PA bowl		Metal bowl		Metal bowl with level gauge	
													With barb fitting	With drain guide	With drain cock	With drain guide	With drain cock	With drain guide
	M	N	Q	R	S	T	U	V	W	Y	Z	B	B	B	B	B	B	B
AW20-D	30	34	43.9	5.4	15.4	55	2.3	29.7	28.5	14	6	104.9	—	91.4	87.4	93.9	—	—
AW30-D	41	40	46	6.5	8	53	2.3	31.3	38.5	19	7	157.1	123.9	122.2	117.8	122.3	137.8	142.3
AW40-D	50	54	54	8.5	10.5	70	2.3	35.5	42.5	21	7	186.9	155.6	153.9	149.5	154	169.5	174
AW40-06-D	50	54	55.5	8.5	10.5	70	2.3	37	42.5	21	7	188.9	157.6	155.9	151.5	156	171.5	176
AW60-D	70	75	66	11	22	113	3.2	—	—	—	—	273.9	242.6	240.9	236.5	241	256.5	261

*1 The dimension of C is the length when the filter regulator knob is unlocked.

AW20-D to AW60-D Series
AW20K-D to AW60K-D Series

Dimensions

Standard (Square Embedded Type Pressure Gauge, Digital Pressure Switch)

AW20-□□□E/E1/E2/E3/E4-D

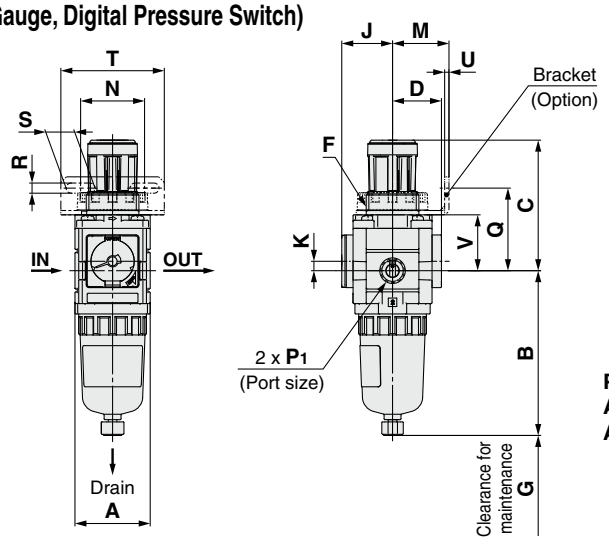

Panel cutout dimensions

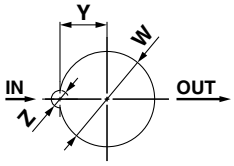

Plate thickness
AW20-D to AW30-D : Max. 3.5
AW40-D to AW40-06-D: Max. 5

AW30-□□□E/E1/E2/E3/E4-D to AW40-□□□E/E1/E2/E3/E4-D

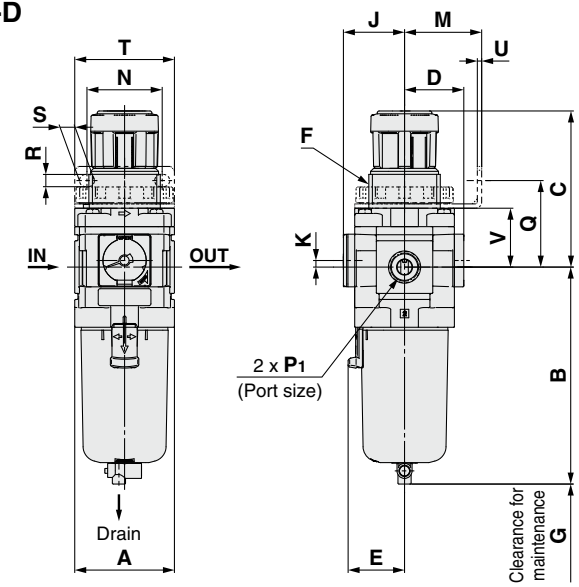

AW60-□□□E/E1/E2/E3/E4-D

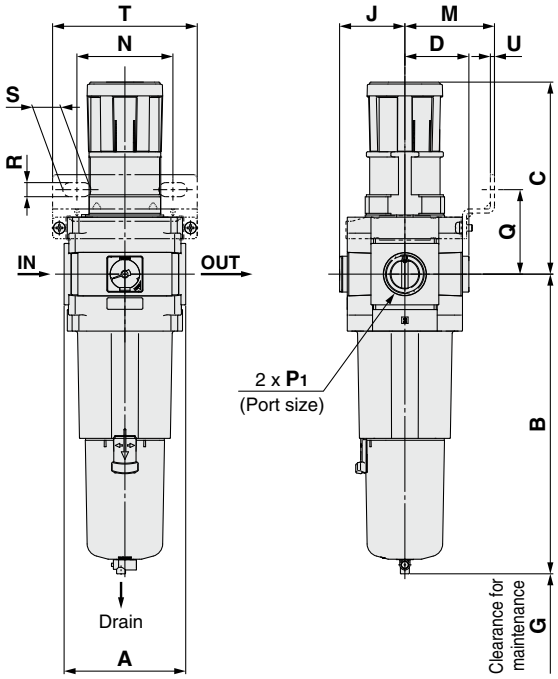

Square embedded type pressure gauge	Digital pressure switch
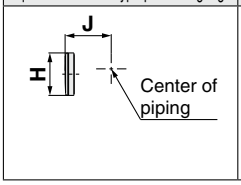	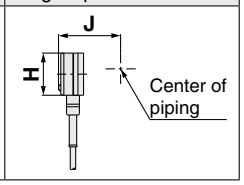

Applicable model	Optional specifications	Semi-standard					
	With auto drain	PC/PA bowl		Metal bowl		Metal bowl with level gauge	
		Drain cock with barb fitting	With drain guide	With drain cock	With drain guide	With drain cock	With drain guide
AW20-D	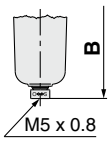		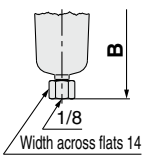	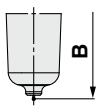	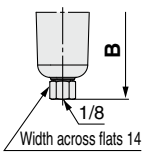		
AW30-D to AW60-D	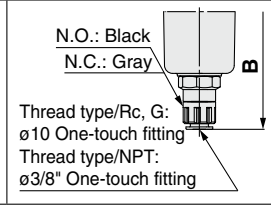	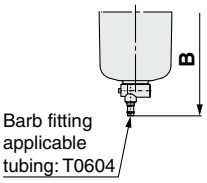	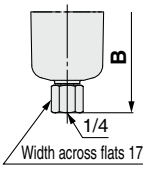	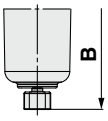	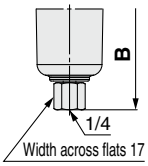	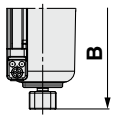	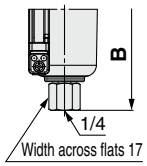

Model	Standard specifications									Optional specifications			
										Square embedded type pressure gauge		Digital pressure switch	
	P_1	A	B	C*1	D	E	F	G	K	H	J	H	J
AW20-D	1/8, 1/4	40	87.6	71.8	26	—	M28 x 1	40	5	□28	27	□27.8	37.5
AW30-D	1/4, 3/8	53	115.4	86.5	31.5	30	M38 x 1.5	55	3.5	□28	32.5	□27.8	43
AW40-D	1/4, 3/8, 1/2	70	147.1	91.5	40.5	38.4	M42 x 1.5	80	—	□28	41.5	□27.8	52
AW40-06-D	3/4	75	149.1	93	40.5	38.4	M42 x 1.5	80	—	□28	41.5	□27.8	52
AW60-D	3/4, 1	95	234.1	155	50	—	—	30	—	□28	51	□27.8	61.5

Model	Optional specifications												Semi-standard					
	Bracket mount							Panel mount				With auto drain	PC/PA bowl		Metal bowl		Metal bowl with level gauge	
													With barb fitting	With drain guide	With drain cock	With drain guide	With drain cock	With drain guide
	M	N	Q	R	S	T	U	V	W	Y	Z	B	B	B	B	B	B	B
AW20-D	30	34	43.9	5.4	15.4	55	2.3	29.7	28.5	14	6	104.9	—	91.4	87.4	93.9	—	—
AW30-D	41	40	46	6.5	8	53	2.3	31.3	38.5	19	7	157.1	123.9	122.2	117.8	122.3	137.8	142.3
AW40-D	50	54	54	8.5	10.5	70	2.3	35.5	42.5	21	7	186.9	155.6	153.9	149.5	154	169.5	174
AW40-06-D	50	54	55.5	8.5	10.5	70	2.3	37	42.5	21	7	188.9	157.6	155.9	151.5	156	171.5	176
AW60-D	70	75	66	11	22	113	3.2	—	—	—	—	273.9	242.6	240.9	236.5	241	256.5	261

*1 The dimension of C is the length when the filter regulator knob is unlocked.

Dimensions

With Backflow Function (Round Type Pressure Gauge, Square Embedded Type Pressure Gauge, Digital Pressure Switch)
AW20K-D

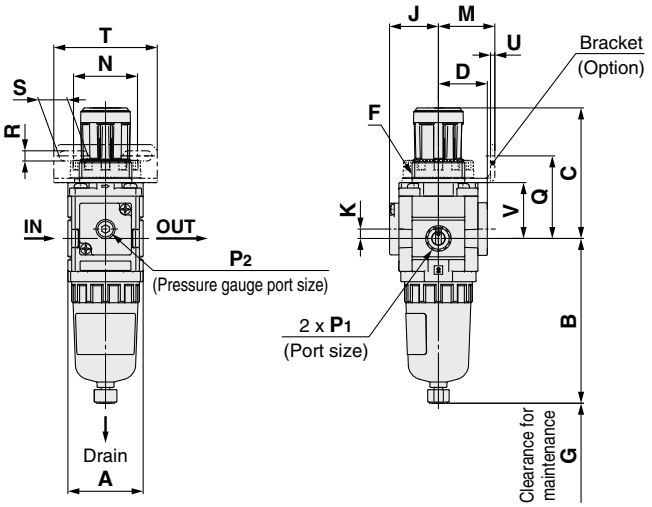

Panel cutout dimensions

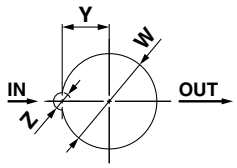

Plate thickness
AW20K-D to AW30K-D : Max. 3.5
AW40K-D to AW40K-06-D: Max. 5

AW30K-D to AW40K-06-D

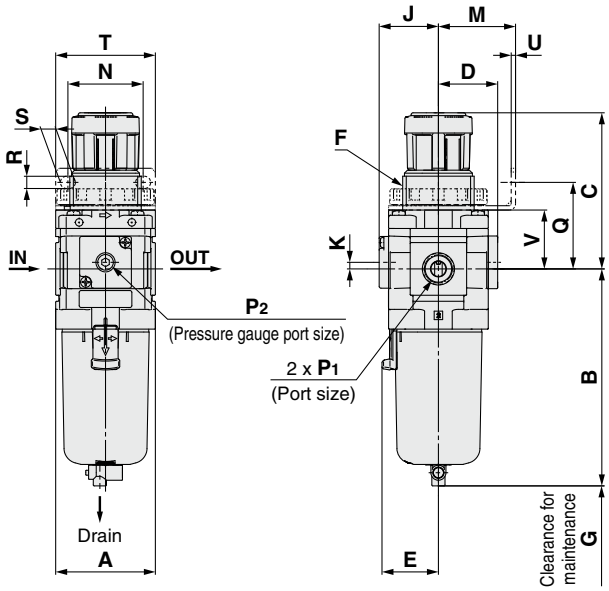

AW60K-D

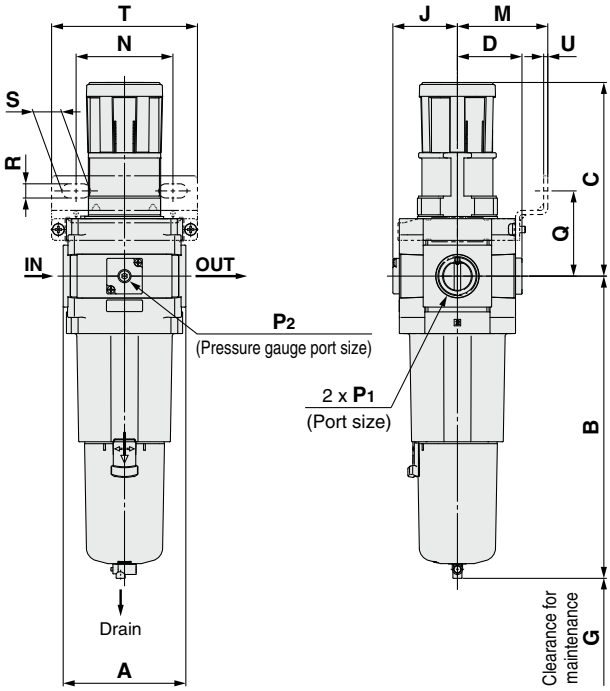

Round type pressure gauge	Square embedded type pressure gauge	Digital pressure switch
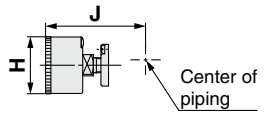	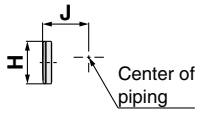	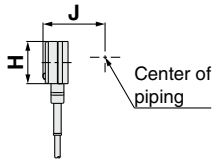

Applicable model	Optional specifications	Semi-standard					
	With auto drain	PC/PA bowl		Metal bowl		Metal bowl with level gauge	
		Drain cock with barb fitting	With drain guide	With drain cock	With drain guide	With drain cock	With drain guide
AW20K-D	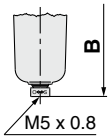		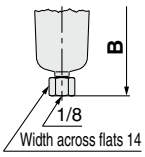	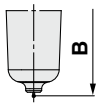	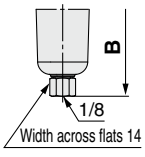		
AW30K-D to AW60K-D	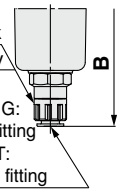	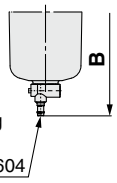	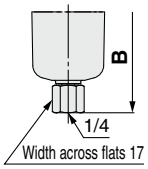	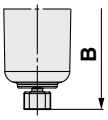	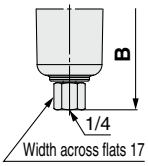	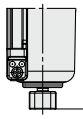	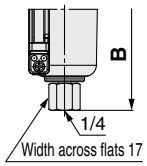

Model	Standard specifications											Optional specifications					
												Square embedded type pressure gauge		Digital pressure switch		Round type pressure gauge	
	P_1	P_2	A	B	C*1	D	E	F	G	J	K	H	J	H	J	H	J
AW20K-D	1/8, 1/4	1/8	40	87.6	71.8	26	—	M28 x 1	40	26	5	□28	27	□27.8	37.5	ø37.5	62.5
AW30K-D	1/4, 3/8	1/8	53	115.4	86.5	31.5	30	M38 x 1.5	55	31.5	3.5	□28	32.5	□27.8	43	ø37.5	68
AW40K-D	1/4, 3/8, 1/2	1/8	70	147.1	91.5	40.5	38.4	M42 x 1.5	80	40.5	—	□28	41.5	□27.8	52	ø42.5	78
AW40K-06-D	3/4	1/8	75	149.1	93	40.5	38.4	M42 x 1.5	80	40.5	—	□28	41.5	□27.8	52	ø42.5	78
AW60K-D	3/4, 1	1/8	95	234.1	155	50	—	—	30	50	—	□28	51	□27.8	61.5	ø42.5	87.5

Model	Optional specifications														Semi-standard					
	Round type pressure gauge (with color zone)		Bracket mount							Panel mount				With auto drain	PC/PA bowl		Metal bowl		Metal bowl with level gauge	
															With barb fitting	With drain guide	With drain cock	With drain guide	With drain cock	With drain guide
	H	J	M	N	Q	R	S	T	U	V	W	Y	Z	B	B	B	B	B	B	B
AW20K-D	ø37.5	63.5	30	34	43.9	5.4	15.4	55	2.3	29.7	28.5	14	6	104.9	—	91.4	87.4	93.9	—	—
AW30K-D	ø37.5	69	41	40	46	6.5	8	53	2.3	31.3	38.5	19	7	157.1	123.9	122.2	117.8	122.3	137.8	142.3
AW40K-D	ø42.5	78	50	54	54	8.5	10.5	70	2.3	35.5	42.5	21	7	186.9	155.6	153.9	149.5	154	169.5	174
AW40K-06-D	ø42.5	78	50	54	55.5	8.5	10.5	70	2.3	37	42.5	21	7	188.9	157.6	155.9	151.5	156	171.5	176
AW60K-D	ø42.5	87.5	70	75	66	11	22	113	3.2	—	—	—	—	273.9	242.6	240.9	236.5	241	256.5	261

*1 The dimension of C is the length when the filter regulator knob is unlocked.

Filter Regulator/*AW20-D* to *AW60-D*
Filter Regulator with Backflow Function/*AW20K-D* to *AW60K-D*
Made to Order

Please contact SMC for detailed dimensions, specifications, and lead times.

Made to Order

① 0.4 MPa Setting

The setting specification is 0.4 MPa.

When a pressure gauge is included, the display will show a range from 0 to 0.7 MPa.

Specifications

Made-to-order part no.	-X406
Proof pressure [MPa]	1.5
Max. operating pressure [MPa]	1.0
Set pressure range [MPa]∗1	0.05 to 0.4

∗1 Pressure can be set higher than the specification pressure in some cases, but use pressure within the specification range.

Applicable Models

Model	AW20(K)-D	AW30(K)-D	AW40(K)-D	AW40(K)-06-D	AW60(K)-D
Port size	1/8, 1/4	1/4, 3/8	1/4, 3/8, 1/2	3/4	3/4, 1

② Long Bowl

Drain capacity is greater than that of standard models.

Applicable Models/Drain Capacity

Model	AW20(K)-D	AW30(K)-D	AW40(K)-D	AW40(K)-06-D	AW60(K)-D
Port size	1/8, 1/4	1/4, 3/8	1/4, 3/8, 1/2	3/4	3/4, 1
Drain capacity [cm³]	19	43	88		
B dimension [mm]∗1	108.1	137.3	167.2	169.2	254.2

∗1 For polycarbonate bowls. Please contact SMC for other bowl materials.

AW20-D **AW30 to 60-D**

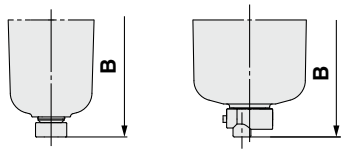

How to Order

AW 30 ❶ ❷ – ❸ 03 ❹ ❺ – ❻ – D – X406

X406	0.4 MPa setting
X64	Long bowl

Option and Semi-standard Symbol Selection

· Select one each for **a** to **i**.
· When more than one specification is required, indicate in alphanumeric order.
Example) AW30K-F03BE-2NR-D-X406

			Symbol	Description	0.4 MPa Setting ❶ Body size 20	30	40	60	Long Bowl ❶ Body size 20	30	40	60
❷	With backflow function		**Nil**	Without backflow function	●	●	●	●	●	●	●	●
			K∗1	With backflow function	●	●	●	●	●	●	●	●
			+									
❸	Pipe thread type		**Nil**	Rc	●	●	●	●	●	●	●	●
			N	NPT	●	●	●	●	●	●	●	●
			F	G	●	●	●	●	●	●	●	●
			+									
❹	Port size		**01**	1/8	●	—	—	—	●	—	—	—
			02	1/4	●	●	●	—	●	●	●	—
			03	3/8	—	●	●	—	—	●	●	—
			04	1/2	—	—	●	—	—	—	●	—
			06	3/4	—	—	●	●	—	—	●	●
			10	1	—	—	—	●	—	—	—	●
			+									
❺	Option∗2	**a** Mounting	**Nil**	Without mounting option	●	●	●	●	●	●	●	●
			B∗3	With bracket	●	●	●	●	●	●	●	●
			H	With set nut (for panel mount)	●	●	●	—	●	●	●	—
			+									
		b Float type auto drain∗4	**Nil**	Without auto drain	●	●	●	●	—	—	—	—
			C∗5	Float type auto drain (N.C.): Drain port is closed when pressure is not applied.	●	●	●	●	—	—	—	—
			D∗6	Float type auto drain (N.O.): Drain port is open when pressure is not applied.	—	●	●	●	—	—	—	—
			+									
		c Pressure gauge∗7	**Nil**	Without pressure gauge	●	●	●	●	●	●	●	●
			E	Square embedded type pressure gauge (with limit indicator)	●	●	●	●	●	●	●	●
			G	Round type pressure gauge (with limit indicator)	●	●	●	●	●	●	●	●
			M	Round type pressure gauge (with color zone)	●	●	●	●	●	●	●	●
		c Digital pressure switch∗8	**E1**	Output: NPN output, Electrical entry: Wiring bottom entry	●	●	●	●	●	●	●	●
			E2	Output: NPN output, Electrical entry: Wiring top entry	●	●	●	●	●	●	●	●
			E3	Output: PNP output, Electrical entry: Wiring bottom entry	●	●	●	●	●	●	●	●
			E4	Output: PNP output, Electrical entry: Wiring top entry	●	●	●	●	●	●	●	●

∗1 Set the inlet pressure to at least 0.05 MPa higher than the set pressure.
∗2 Options B, G, H, and M are not assembled and supplied loose at the time of shipment.
∗3 The assembly consists of a bracket and set nuts (applicable to the AW20(K)-D to AW40(K)-D). The AR60(K)-D assembly includes 2 types of brackets and 2 mounting screws.
∗4 The auto drain port is ø10 One-touch fitting (❸ Pipe thread type: Rc, G) or ø3/8" One-touch fitting (❸ Pipe thread type: NPT)
∗5 When pressure is not applied, condensate which does not start the auto drain mechanism will be left in the bowl. Releasing the residual condensate before ending operations for the day is recommended.
∗6 If the compressor is small (0.75 kW, discharge flow is less than 100 L/min (ANR)), air leakage from the drain cock may occur during the start of operations. N.C. type is recommended.
∗7 When the pressure gauge is attached, a 1.0 MPa pressure gauge will be fitted for standard (0.85 MPa) type. 0.4 MPa pressure gauge for 0.2 MPa type. 0.7 MPa pressure gauge for 0.4 MPa type (-X406).
∗8 When choosing with H (panel mount), the installation space for lead wires will not be secured. In this case, select "wiring bottom entry" for the electrical entry.

			Symbol	Description	0.4 MPa Setting				Long Bowl			
					❶ Body size				❶ Body size			
					20	30	40	60	20	30	40	60
❻ Semi-standard	d	Set pressure∗9	Nil	0.05 to 0.85 MPa setting	—	—	—	—	●	●	●	●
			1	0.02 to 0.2 MPa setting	—	—	—	—	●	●	●	●
			+									
	e	Bowl∗10	Nil	Polycarbonate bowl	●	●	●	●	●	●	●	●
			2	Metal bowl	●	●	●	●	●	●	●	●
			6	Nylon bowl	●	●	●	●	●	●	●	●
			8	Metal bowl with level gauge	—	●	●	●	—	—	—	—
			C	With bowl guard	●	—∗11	—∗11	—∗11	●	—∗11	—∗11	—∗11
			6C	With bowl guard (Nylon bowl)	●	—∗12	—∗12	—∗12	●	—∗12	—∗12	—∗12
			+									
	f	Drain port∗13	Nil	With drain cock	●	●	●	●	●	●	●	●
			J∗14	Drain guide 1/8	●	—	—	—	●	—	—	—
				Drain guide 1/4	—	●	●	●	—	●	●	●
			W∗15	Drain cock with barb fitting	—	●	●	●	—	●	●	●
			+									
	g	Exhaust mechanism	Nil	Relieving type	●	●	●	●	●	●	●	●
			N	Non-relieving type	●	●	●	●	●	●	●	●
			+									
	h	Flow direction	Nil	Flow direction: Left to right	●	●	●	●	●	●	●	●
			R	Flow direction: Right to left	●	●	●	●	●	●	●	●
			+									
	i	Unit	Nil	Unit on product label: MPa, °C, Pressure gauge in SI units: MPa	●	●	●	●	●	●	●	●
			Z∗16	Unit on product label: psi, °F, Pressure gauge: MPa/psi dual scale	○∗18	○∗18	○∗18	○∗18	○∗18	○∗18	○∗18	○∗18
			ZA∗17	Digital pressure switch: With unit selection function	△∗19	△∗19	△∗19	△∗19	△∗19	△∗19	△∗19	△∗19

∗9 Pressure can be set higher than the specification pressure in some cases, but use pressure within the specification range.
∗10 Refer to chemical data on page 129 for chemical resistance of the bowl.
∗11 A bowl guard is provided as standard equipment (polycarbonate).
∗12 A bowl guard is provided as standard equipment (nylon).
∗13 The combination of float type auto drain C and D is not available.
∗14 Without a valve function. The mounting screws are the same as the thread of ❸.
∗15 The combination of metal bowl 2 and 8 is not available.
∗16 For the pipe thread type: NPT
This product is for overseas use only according to the New Measurement Act. (The SI unit type is provided for use in Japan.) Cannot be used with M: Round type pressure gauge (with color zone). Available by request for special. The digital pressure switch will be equipped with the unit selection function, setting to psi initially.
∗17 For options: E1, E2, E3, E4
This product is for overseas use only according to the New Measurement Act. (The SI unit type is provided for use in Japan.)
∗18 ○: For the pipe thread type: NPT only
∗19 △: Select with options: E1, E2, E3, E4.

AW30-B to AW60-B Filter Regulator
Made to Order

Made to Order

Please contact SMC for detailed dimensions, specifications and lead times.

① Special Temperature Environment

Special materials are used in the manufacturing of seals and resin parts to allow them to withstand various temperature conditions in cold or tropical (hot) climates.

Specifications

Made-to-order part no.		-X430	-X440
Environment		Low temperature	High temperature
Ambient temperature [°C]		–30 to 60	–5 to 80
Fluid temperature [°C]		–5 to 60 (with no freezing)	
Material	**Rubber parts**	Special NBR	FKM
	Main parts	Metal (Aluminum die-cast, etc.)	

AW30-03-2-B-X440

Applicable Model

Model	AW30-B	AW40-B	AW40-06-B	AW60-B
Port size	1/4, 3/8	1/4, 3/8, 1/2	3/4	3/4, 1

AW 30 – □ 03 BG – 2 □ – B – X430

❶ ❷ ❸ ❹ ❺ ❻

For high/low temperature

X430	Low temperature
X440	High temperature

- Option/Semi-standard: Select one each for **a** to **g**.
- Option/Semi-standard symbol: When more than one specification is required, indicate in alphanumeric order.

Example) AW30-03BG-2N-B-X430

			Symbol	Description	❶ Body size 30	40	60
❷	Pipe thread type		**Nil**	Rc	●	●	●
			N	NPT	●	●	●
			F	G	●	●	●
			+				
❸	Port size		**02**	1/4	●	●	—
			03	3/8	●	●	—
			04	1/2	—	●	—
			06	3/4	—	●	●
			10	1	—	—	●
			+				
❹	Option*1	a Mounting	**Nil**	Without mounting option	●	●	●
			B*2	With bracket	●	●	●
			H	With set nut (for panel mount)	●	●	—
			+				
		b Pressure gauge	**Nil**	Without pressure gauge	●	●	●
			G*3	Round type pressure gauge (without limit indicator)	●	●	●
			+				
❺	Bowl *4		**2**	Metal bowl	●	●	●
			+				
❻	Semi-standard	c Set pressure	**Nil**	0.05 to 0.85 MPa setting	●	●	●
			1*5	0.02 to 0.2 MPa setting	●	●	●
			+				
		d Drain port	**Nil**	With drain cock	●	●	●
			J*6	Drain guide 1/4	●	●	●
			+				
		e Exhaust mechanism	**Nil**	Relieving type	●	●	●
			N	Non-relieving type	●	●	●
			+				
		f Flow direction	**Nil**	Flow direction: Left to right	●	●	●
			R	Flow direction: Right to left	●	●	●
			+				
		g Pressure unit	**Nil**	Name plate, caution plate for bowl, and pressure gauge in SI units: MPa	●	●	●
			Z*7	Name plate, caution plate for bowl, and pressure gauge in imperial units: psi, °F	○*8	○*8	○*8

*1 Options B, G, H are not assembled and supplied loose at the time of shipment.
*2 Assembly of a bracket and set nuts (AW30-B to AW40-B)
Including 2 mounting screws for the AW60-B
*3 Mounting thread for pressure gauge: 1/8, Pressure gauge type: G43
*4 Only metal bowl 2 is available.
*5 The only difference from the standard specifications is the spring for the regulator. It does not restrict the setting of 0.2 MPa or more. When the pressure gauge is attached, a 0.4 MPa pressure gauge will be fitted.
*6 Without a valve function
*7 For pipe thread type: NPT. This product is for overseas use only according to the new Measurement Act. (The SI unit type is provided for use in Japan.)
*8 ○: For pipe thread type: NPT only

AW20-B to AW60-B Filter Regulator
Made to Order

Please contact SMC for detailed dimensions, specifications and lead times.

Made to Order

② High Pressure

Strong materials are used in the manufacturing of filter regulators intended for high pressure operation. Also, construction modification allows a wider set pressure range.

Specifications

Made-to-order part no.	-X425
Proof pressure [MPa]	3.0
Maximum operating pressure [MPa]	2.0
Set pressure range [MPa]	0.1 to 1.7
Ambient and fluid temperature [°C]	–5 to 60°C (with no freezing)

AW30-03-2-B-X425

Applicable Model

Model	AW20-B	AW30-B	AW40-B	AW40-06-B	AW60-B
Port size	1/8, 1/4	1/4, 3/8	1/4, 3/8, 1/2	3/4	3/4, 1

AW 30 – □ 03 BG – 2 □ – B – X425

❶ ❷ ❸ ❹ ❺ ❻

For high pressure

- Option/Semi-standard: Select one each for **a** to **f**.
- Option/Semi-standard symbol: When more than one specification is required, indicate in alphanumeric order.

Example) AW30-03BG-2N-B-X425

			Symbol	Description	❶ Body size 20	30	40	60
❷	Pipe thread type		**Nil**	Rc	●	●	●	●
			N	NPT	●	●	●	●
			F	G	●	●	●	●
			+					
❸	Port size		**01**	1/8	●	—	—	—
			02	1/4	●	●	●	—
			03	3/8	—	●	●	—
			04	1/2	—	—	●	—
			06	3/4	—	—	●	●
			10	1	—	—	—	●
			+					
❹	Option *1	**a** Mounting	**Nil**	Without mounting option	●	●	●	●
			B*2	With bracket	●	●	●	●
			H	With set nut (for panel mount)	●	●	●	—
			+					
		b Pressure gauge	**Nil**	Without pressure gauge	●	●	●	●
			G*3	Round type pressure gauge (with limit indicator)	●	●	●	●
			+					
❺	Bowl *4		**2**	Metal bowl	●	●	●	●
			8	Metal bowl with level gauge	—	●	●	●
			+					
❻	Semi-standard	**c** Exhaust mechanism	**Nil**	Relieving type	●	●	●	●
			N	Non-relieving type	●	●	●	●
			+					
		d Drain port	**Nil**	With drain cock	●	●	●	●
			J*5	Drain guide 1/8	●	—	—	—
				Drain guide 1/4	—	●	●	●
			+					
		e Flow direction	**Nil**	Flow direction: Left to right	●	●	●	●
			R	Flow direction: Right to left	●	●	●	●
			+					
		f Pressure unit	**Nil**	Name plate, caution plate for bowl, and pressure gauge in SI units: MPa	●	●	●	●
			Z*6	Name plate, caution plate for bowl, and pressure gauge in imperial units: psi, °F	○*7	○*7	○*7	○*7

*1 Options B, G, H are not assembled and supplied loose at the time of shipment.
*2 Assembly of a bracket and set nuts (AW20-B to AW40-B)
Including 2 mounting screws for the AW60-B
*3 Mounting thread for pressure gauge: 1/8, Pressure gauge type: G46-20-□
*4 Only metal bowl 2 and 8 are available.
*5 Without a valve function
*6 For pipe thread type: NPT. This product is for overseas use only according to the new Measurement Act. (The SI unit type is provided for use in Japan.)
*7 ○: For pipe thread type: NPT only

Filter Regulator/*AW20-D to AW60-D*
Filter Regulator with Backflow Function/*AW20K-D to AW60K-D*
Made to Order

Please contact SMC for detailed dimensions, specifications, and lead times.

Made to Order

Without backflow function | With backflow function

③ Clean Series

For details, refer to the Clean Series/Low Particle Generation section of the **Web Catalog**.

10 - Standard model no.

- **Clean Series**

④ Copper, Fluorine and Silicone-free + Low Particle Generation

For details, refer to the Clean Series/Low Particle Generation section of the **Web Catalog**.

21 - Standard model no.

- **Copper, Fluorine and Silicone-free + Low Particle Generation**

AR-D/AW-D Series
Option

Knob Cover

Can be mounted on the knob of a regulator or filter regulator in order to prevent the accidental operation of the knob

AR 34 P – 580AS

Size

24
34
44
54

Standard Specifications

Ambient temperature	–5 to 60°C

Dimensions

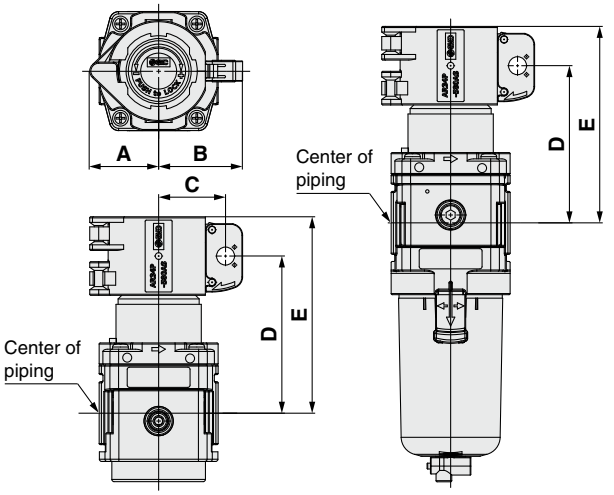

AR-D Series **AW-D Series**

Part no.	A	B	C	D	E	Applicable model
AR24P-580AS	23.5	32.1	24.5	53.1	69.1	**AR20-D**
				58.1	74.1	**AW20-D**
AR34P-580AS	30.7	37.4	29.8	70	87.5	**AR30-D, AW30-D**
AR44P-580AS	32.8	39.4	31.8	74.5	97	**AR40-D, AW40-D**
				76	98.5	**AR40-06-D, AW40-06-D**
AR54P-580AS	42	48.9	41.3	99.6	133.6	**AR50-D**
				129.6	163.6	**AR60-D, AW60-D**

Detailed dimensions of the lock hole

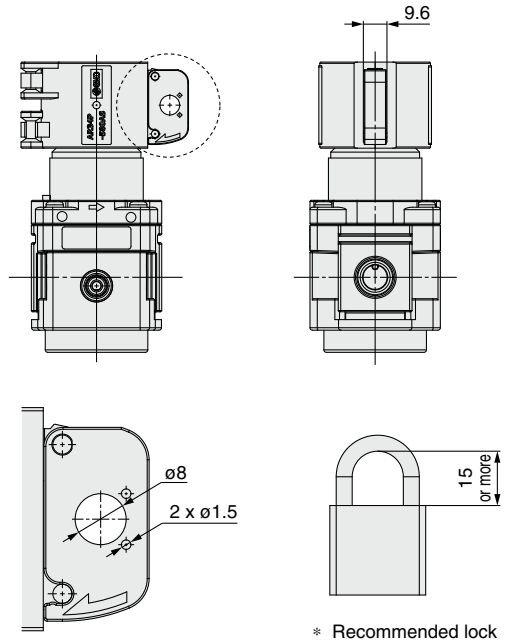

∗ Recommended lock dimensions

Mounting Precautions

Before mounting the knob cover, confirm that the knob is in the locked state (in which the orange line is not visible).
Mount the cover in accordance with the mounting instructions below.

1 Mount the knob cover on the knob.

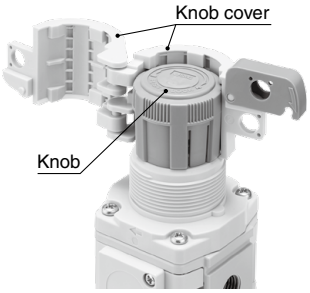

2 Close the lock cover.

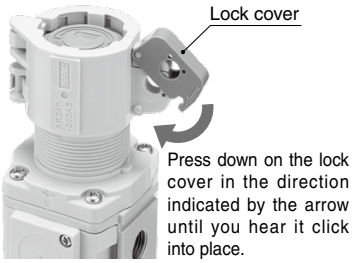

3 Secure with a lock (provided by the customer).

The knob cover can be mounted facing each mounting angle in relation to the knob.

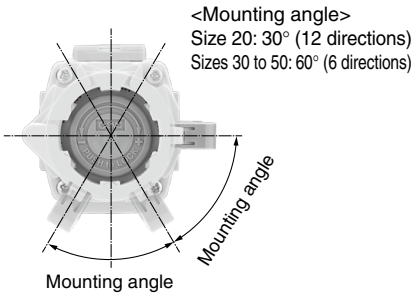

AW(K)-D Series
Specific Product Precautions

Be sure to read this before handling the products. Refer to the back cover for safety instructions. For F.R.L. units precautions, refer to the "Handling Precautions for SMC Products" and the "Operation Manual" on the SMC website: https://www.smcworld.com

Design / Selection

⚠ Warning

1. Residual pressure disposal (outlet pressure removal) is not possible for the AW20-D to AW60-D even though the inlet pressure is exhausted. When the residual pressure disposal is performed, use the filter regulator with backflow function (AW20K-D to AW60K-D).
2. **The bowl material of the standard filter regulator is polycarbonate. Do not use in an environment where they are exposed to or come in contact with organic solvents, chemicals, cutting oil, synthetic oil, alkali, and thread lock solutions.**

Chemical resistance of polycarbonate or nylon bowl

Type	Chemical name	Application examples	Material	
			Polycarbonate	Nylon
Acid	Hydrochloric acid Sulfuric acid Phosphoric acid Chromic acid	Acid washing liquid for metals	△	×
Alkaline	Sodium hydroxide (Caustic soda) Potash Calcium hydroxide (Slack lime) Ammonia water Sodium carbonate	Degreasing of metals Industrial salts Water-soluble cutting oil	×	○
Inorganic salts	Sodium sulfide Potassium nitrate Sodium sulfate	—	×	△
Chlorine solvents	Carbon tetrachloride Chloroform Ethylene chloride Methylene chloride	Cleansing liquid for metals Printing ink Dilution	×	△
Aromatic series	Benzene Toluene Paint thinner	Coatings Dry cleaning	×	△
Ketone	Acetone Methyl ethyl ketone Cyclohexane	Photographic film Dry cleaning Textile industries	×	×
Alcohol	Ethyl alcohol IPA Methyl alcohol	Antifreeze Adhesives	△	×
Oil	Gasoline Kerosene	—	×	○
Ester	Phthalic acid dimethyl Phthalic acid diethyl Acetic acid	Synthetic oil Anti-rust additives	×	○
Ether	Methyl ether Ethyl ether	Brake oil additives	×	○
Amino	Methyl amino	Cutting oil Brake oil additives Rubber accelerator	×	×
Others	Thread-lock fluid Seawater Leak tester	—	×	△

○: Essentially safe △: Some effects may occur. ×: Effects will occur.

When the above factors are present, or there is some doubt, use a metal bowl for safety.

⚠ Caution

1. When operating at an inlet pressure lower than the inlet pressure used in the flow rate characteristics graph, the pressure drop on the outlet side may be greater. Therefore, be sure to conduct testing using the actual equipment.
   For pressure control equipment selection, refer to the "Product Selection Guide."

Maintenance

⚠ Warning

1. Replace the element every 2 years or when the differential pressure (pressure drop) becomes 0.1 MPa, whichever comes first, to prevent damage to the element.

Mounting / Adjustment

⚠ Warning

1. Set the filter regulator while verifying the displayed values of the inlet and outlet pressure gauges. Turning the regulator knob excessively can cause damage to the internal parts.
2. Do not use tools on the pressure regulator knob as this may cause damage. It must be operated manually.

⚠ Caution

1. Be sure to unlock the knob before adjusting the pressure and lock it after setting the pressure.
   Failure to follow this procedure can cause damage to the knob and the outlet pressure may fluctuate.
   - Pull the pressure regulator knob to unlock. (You can visually verify this with the "orange mark" that appears in the gap.)
   - Push the pressure regulator knob to lock. When the knob is not easily locked, turn it left and right a little and then push it (when the knob is locked, the "orange mark", i.e., the gap will disappear).

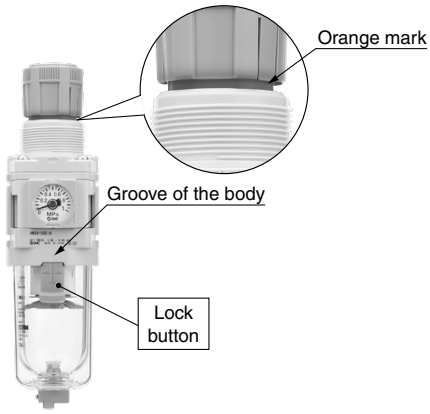

2. When the bowl is installed on the AW30-D to AW60-D, install them so that the lock button lines up to the groove of the front (or the back) of the body to avoid drop or damage of the bowl.

Piping

⚠ Warning

1. To screw the pressure gauge and piping materials into the pressure gauge port on the product, tighten to the recommended torque (3 to 5 N·m) while securely holding the AW(K)-D in place. Additionally, when mounting a One-touch fitting to the pressure gauge port, refer to the Fittings and Tubing Precautions.

Digital Pressure Switch/*ISE35-X523*
Related Product

How to Order

ISE35 – N – 25 – M L A – X523

Electrical entry

N	Wiring bottom entry 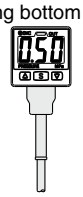
R	Wiring top entry 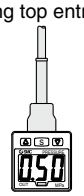

Output specification

25	NPN output
65	PNP output

Unit specification

Nil	Units selection function*1
M	SI units only*2
P	Pressure unit: psi (Initial value), Units selection function*1

*1 Under the New Measurement Act, switches with the units selection function are no longer allowed for use in Japan.
*2 Fixed unit: MPa

Option 1

Nil	None
L	Lead wire with connector (Length: 2 m) 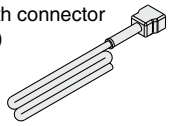

A	AR/AW-D series mounting kit 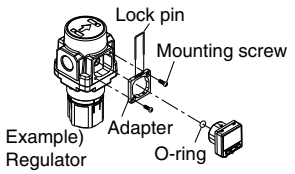

Options/Part Nos.

When only optional parts are required, order with the part numbers listed below.

Description	Part no.	Note
Lead wire with connector	ZS-32-A	Length: 2 m (With rubber cover)
Mounting kit	ZS-32-C-X473	For ISE35-□-A-X523 (AR/AW-D series) Set screw (3 x 8 L, 2 pcs.), adapter, lock pin, and O-ring are attached.

Applicable Series

Product series that this product can be installed in

Product series	Model
F.R.L. units	AC20-D, AC30-D, AC40-D, AC50-D, AC60-D
	AC20A-D, AC30A-D, AC40A-D, AC50A-D, AC60A-D
	AC20B-D, AC30B-D, AC40B-D, AC50B-D, AC60B-D
	AC20C-D, AC30C-D, AC40C-D
	AC20D-D, AC30D-D, AC40D-D
Regulator	AR20(K)-D, AR30(K)-D, AR40(K)-D, AR50(K)-D, AR60(K)-D
Filter regulator	AW20(K)-D, AW30(K)-D, AW40(K)-D, AW60(K)-D
Mist separator regulator	AWM20-D, AWM30-D, AWM40-D
Micro mist separator regulator	AWD20-D, AWD30-D, AWD40-D

Specifications

Rated pressure range		0 to 1 MPa
Display/Set pressure range		–0.1 to 1 MPa
Withstand pressure		1.5 MPa
Display/Smallest settable increment		0.01 MPa
Applicable fluid		Air, Non-corrosive gas, Non-flammable gas
Power supply voltage		12 to 24 VDC ±10%, Ripple (p-p) 10% or less (With power supply polarity protection)
Current consumption		55 mA or less (at no load)
Switch output		NPN or PNP open collector output: 1 output
	Max. load current	80 mA
	Max. applied voltage	30 V (With NPN output)
	Residual voltage	1 V or less (With load current of 80 mA)
	Response time	1 s (0.25, 0.5, 2, 3 s selections)
Short circuit protection		Yes
Repeatability		±1% F.S.
Hysteresis	**Hysteresis mode**	Adjustable (Can be set from 0)
	Window comparator mode	
Display type		3-digit, 7-segment indicator, 2-color display (Red/Green) A switch can be operated simultaneously.
Display accuracy		±2% F.S. ±1 digit (at 25°C ±3°C ambient temperature)
Indicator light		Lights up when output is turned ON (Green)
Environmental resistance	**Enclosure**	IP40
	Operating temperature range	–5 to 50°C (No condensation or freezing)
Lead wire with connector (Option: L)		Oilproof heavy-duty vinyl cable 3 cores, ø3.4, 2 m Conductor cross section: 0.2 mm² (AWG25) Insulator O.D.: 1.16 mm
Weight		Approx. 14 g (Body only), Approx. 38 g (Including lead wire with connector)
Standards		CE/UKCA marking, UL/CSA (E216656)

Internal Circuits and Wiring Examples

-25
NPN (1 output)

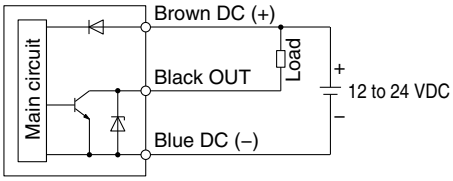

-65
PNP (1 output)

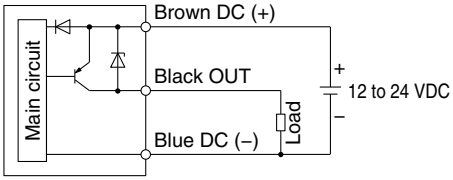

International Standard ISO 8573-1:2010
Compressed Air Purity Classes

Compressed air is used in a variety of manufacturing processes. In this age, compressed air with a high degree of purity is becoming increasingly necessary.
For this reason, it is necessary to remove contaminants from systems which supply compressed air and to secure the quality. The standard which stipulates the class according to the quantities of contaminants in compressed air is ISO 8573-1.

[Outline]
Stipulates the purity class of contaminants (particles, water, oil) mixed in with the compressed air

[Scope]
Can be used in various places in compressed air systems

[Terms and Definitions]
- Purity class: An index assigned for each classification obtained by dividing the concentration of each contaminant into ranges
- Particle: Small discrete mass of solid or liquid matter
- Humidity and liquid water: Water vapor (gas), Water droplets
- Oil: Liquid oil, Oil mist, Vapor

[Purity Classes]

Class	Particles				Humidity and liquid water		Oil
	Maximum number of particles per cubic meter as a function of particle size d [μm]			Mass concentration Cp	Pressure dew point	Concentration of liquid water Cw	Concentration of total oil
	0.1 < d ≤ 0.5	0.5 < d ≤ 1.0	1.0 < d ≤ 5.0	[mg/m3]	[°C]	[g/m3]	[mg/m3]
0	As specified by the equipment user or supplier and more stringent than class 1						
1	≤ 20000	≤ 400	≤ 10	—	≤ –70	—	≤ 0.01
2	≤ 400000	≤ 6000	≤ 100	—	≤ –40	—	≤ 0.1
3	—	≤ 90000	≤ 1000	—	≤ –20	—	≤ 1
4	—	—	≤ 10000	—	≤ +3	—	≤ 5
5	—	—	≤ 100000	—	≤ +7	—	—
6	—	—	—	0 < Cp ≤ 5	≤ +10	—	—
7	—	—	—	5 < Cp ≤ 10	—	Cw ≤ 0.5	—
8	—	—	—	—	—	0.5 < Cw ≤ 5	—
9	—	—	—	—	—	5 < Cw ≤ 10	—
x	—	—	—	Cp > 10	—	Cw > 10	> 5

[How to Perform a Test to Check the Performance]
ISO 12500, which sets out the test method to be used in order to check the filter performance for each of the three kinds of contaminants, is indicated below.
- Particle: ISO 12500-3:2009
- Liquid water: ISO 12500-4:2009
- Oil: ISO 12500-1:2007

∗ Measured using a dedicated evaluation system which has been certified according to ISO 12500-□ and also by a third party (Certified)

[Purity Class Designation Example]

ISO 8573-1:2010 [4 : 6 : 2]

Oil class

2	Concentration of total oil ≤ 0.1 mg/m3

Particle class

4	1.0 μm < d ≤ Particles of 5.0 μm ≤ 10000 particles/m3

Humidity and liquid water class

6	Pressure dew point ≤ +10°C

Air quality of the compressed air obtained for the system

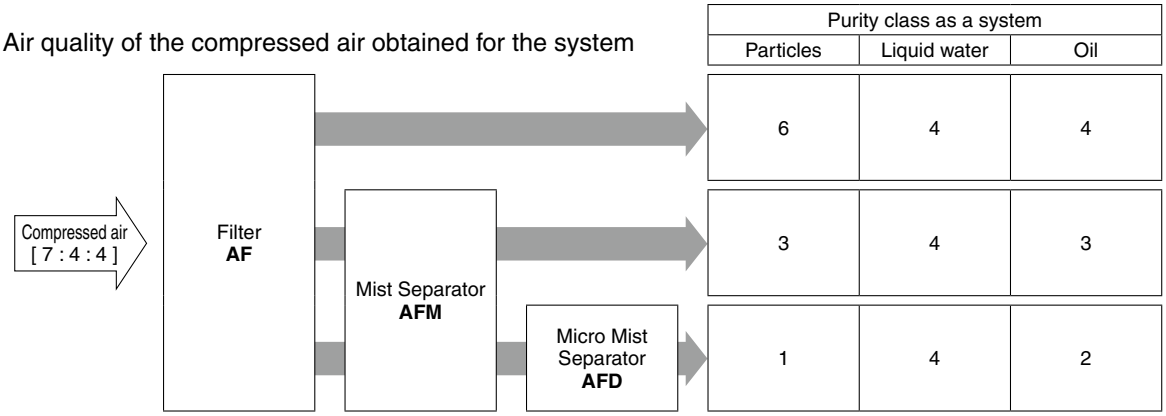

The class indicates the compressed air purity according to ISO 8573-1:2010 (JIS B 8392-1:2012) and indicates the maximum purity class which can be obtained using that system. Note, however, that this value will differ according to the inlet air conditions.

⚠ Safety Instructions

These safety instructions are intended to prevent hazardous situations and/or equipment damage. These instructions indicate the level of potential hazard with the labels of **"Caution," "Warning"** or **"Danger."** They are all important notes for safety and must be followed in addition to International Standards (ISO/IEC)*1), and other safety regulations.

⚠ Caution: **Caution** indicates a hazard with a low level of risk which, if not avoided, could result in minor or moderate injury.

⚠ Warning: **Warning** indicates a hazard with a medium level of risk which, if not avoided, could result in death or serious injury.

⚠ Danger : **Danger** indicates a hazard with a high level of risk which, if not avoided, will result in death or serious injury.

*1) ISO 4414: Pneumatic fluid power – General rules relating to systems.
ISO 4413: Hydraulic fluid power – General rules relating to systems.
IEC 60204-1: Safety of machinery – Electrical equipment of machines. (Part 1: General requirements)
ISO 10218-1: Manipulating industrial robots – Safety.
etc.

⚠ Warning

1. The compatibility of the product is the responsibility of the person who designs the equipment or decides its specifications.

Since the product specified here is used under various operating conditions, its compatibility with specific equipment must be decided by the person who designs the equipment or decides its specifications based on necessary analysis and test results. The expected performance and safety assurance of the equipment will be the responsibility of the person who has determined its compatibility with the product. This person should also continuously review all specifications of the product referring to its latest catalog information, with a view to giving due consideration to any possibility of equipment failure when configuring the equipment.

2. Only personnel with appropriate training should operate machinery and equipment.

The product specified here may become unsafe if handled incorrectly. The assembly, operation and maintenance of machines or equipment including our products must be performed by an operator who is appropriately trained and experienced.

3. Do not service or attempt to remove product and machinery/equipment until safety is confirmed.

1. The inspection and maintenance of machinery/equipment should only be performed after measures to prevent falling or runaway of the driven objects have been confirmed.
2. When the product is to be removed, confirm that the safety measures as mentioned above are implemented and the power from any appropriate source is cut, and read and understand the specific product precautions of all relevant products carefully.
3. Before machinery/equipment is restarted, take measures to prevent unexpected operation and malfunction.

4. Contact SMC beforehand and take special consideration of safety measures if the product is to be used in any of the following conditions.

1. Conditions and environments outside of the given specifications, or use outdoors or in a place exposed to direct sunlight.
2. Installation on equipment in conjunction with atomic energy, railways, air navigation, space, shipping, vehicles, military, medical treatment, combustion and recreation, or equipment in contact with food and beverages, emergency stop circuits, clutch and brake circuits in press applications, safety equipment or other applications unsuitable for the standard specifications described in the product catalog.
3. An application which could have negative effects on people, property, or animals requiring special safety analysis.
4. Use in an interlock circuit, which requires the provision of double interlock for possible failure by using a mechanical protective function, and periodical checks to confirm proper operation.

⚠ Caution

1. The product is provided for use in manufacturing industries.

The product herein described is basically provided for peaceful use in manufacturing industries.
If considering using the product in other industries, consult SMC beforehand and exchange specifications or a contract if necessary.
If anything is unclear, contact your nearest sales branch.

Limited warranty and Disclaimer/ Compliance Requirements

The product used is subject to the following "Limited warranty and Disclaimer" and "Compliance Requirements".
Read and accept them before using the product.

Limited warranty and Disclaimer

1. The warranty period of the product is 1 year in service or 1.5 years after the product is delivered, whichever is first.*2)
   Also, the product may have specified durability, running distance or replacement parts. Please consult your nearest sales branch.
2. For any failure or damage reported within the warranty period which is clearly our responsibility, a replacement product or necessary parts will be provided.
   This limited warranty applies only to our product independently, and not to any other damage incurred due to the failure of the product.
3. Prior to using SMC products, please read and understand the warranty terms and disclaimers noted in the specified catalog for the particular products.

***2) Vacuum pads are excluded from this 1 year warranty.**
A vacuum pad is a consumable part, so it is warranted for a year after it is delivered.
Also, even within the warranty period, the wear of a product due to the use of the vacuum pad or failure due to the deterioration of rubber material are not covered by the limited warranty.

Compliance Requirements

1. The use of SMC products with production equipment for the manufacture of weapons of mass destruction (WMD) or any other weapon is strictly prohibited.
2. The exports of SMC products or technology from one country to another are governed by the relevant security laws and regulations of the countries involved in the transaction. Prior to the shipment of a SMC product to another country, assure that all local rules governing that export are known and followed.

⚠ Caution

SMC products are not intended for use as instruments for legal metrology.

Measurement instruments that SMC manufactures or sells have not been qualified by type approval tests relevant to the metrology (measurement) laws of each country. Therefore, SMC products cannot be used for business or certification ordained by the metrology (measurement) laws of each country.

Revision History

Edition B
* Attachments have been added.
* The number of pages has been increased from 72 to 104. YV

Edition C
* Sizes 40-06, 50, and 60 have been added to the AC series.
* Sizes 40-06, 50, and 60 have been added to the AF, AR(K), and AL.
* The VHS40-06 and 50 have been added.
* Size 40-06 has been added to the AFM/AFD.
* Sizes 40-06 and 60 have been added to the AW(K).
* Made to order options have been added.
* The number of pages has been increased from 104 to 112. ZQ

Edition D
* A right angle square type pressure gauge has been added.
* Various attachments have been added: Right angle/Reducing/Cross adapter, End plate
* Made to order options have been added: Clean Series, Copper, fluorine and silicone-free + Low particle generation (AF, AR, AW)
* A knob cover (option) has been added.
* Connectable modular components have been added.
* The number of pages has been increased from 112 to 136.